City of Newburgh
Bridge Closings & Repairs

Presentation By: Jason Morris, PE (City Engineer)
Date: February 18, 2015
Event: Distressed Property Meeting

BIN	Carried	Crossed	Primary Owner	Primary Maintenance	Condition Rating	Red Flag	Deficiency	Status	Design Type
2022260	Route 32/Lake Street	Quassaick Creek	City of Newburgh	City	3.82	Yes	Structural-Heavy Corrosion of Metal Arch	**Closed** by City on 6-6-14 Temporary Bridge opened 12/9/14	Metal Pipe Arch (Pipe)
2040450	Wisner Avenue	Quassaick Creek	City of Newburgh	City	5.11	No	-	Open	Multiple Box Culvert
2223610	Mill Street Bridge	Quassaick Creek	City of Newburgh	City	2.00	Yes	Structural-Footing Undermined	**Closed** by City on 11/10/14	Masonry Arch
2223620	Walsh Road	Quassaick Creek	City of Newburgh	City	4.32	Yes	Structural-Corrosion	Open - Single Lane Restriction Likely in 2015	Plate Girder – Multi-Girder
2223630	Lake Drive	Quassaick Creek	City of Newburgh	City	2.73	Yes	Structural-Corrosion of Culvert Invert	Open - 3 Ton Weight Restriction	Multiple Pipe Culvert (FHWA)
2223640	Route 207/Little Britain Road	Quassaick Creek	City of Newburgh	City	4.60	No	Some moderate-heavy corrosion (No Flag Issued)	Open	Metal Pipe Arch (Pipe)
2265650	Dupont Avenue	Gidneytown Creek	City of Newburgh	City	4.19	No	-	Open	Slab

Route 32 Lake Street Bridge (BIN#2022260)

Closed by City on June 6, 2014

- Heavy corrosion on metal arch along waterline with some perforations
- Buckling in metal arch along overt (top) due to heavy corrosion along backside
- Corrosion likely due to leaking sewer main in roadway above

Route 32 Lake Street
Temporary Bridge Construction

- City Council authorized rental and installation of a temporary bridge structure on 9/22/14
- Temporary bridge structure rented from Mabey Bridge Company
- Rental costs approximately $860/week after initial 8 week rental for $23,000
- DPW performed all constructed related activities to install the bridge consisting of:

  -Excavation of “bath tub” area to accommodate structure below bridge

  -Excavation for footings

  -Construction of wooden formwork for concrete abutments

  -Rebar and concrete work

  -Concrete pour

  -Bridge bearing installation

  -Bridge structure rigging and assembly

  -Traffic barricade, signage and striping

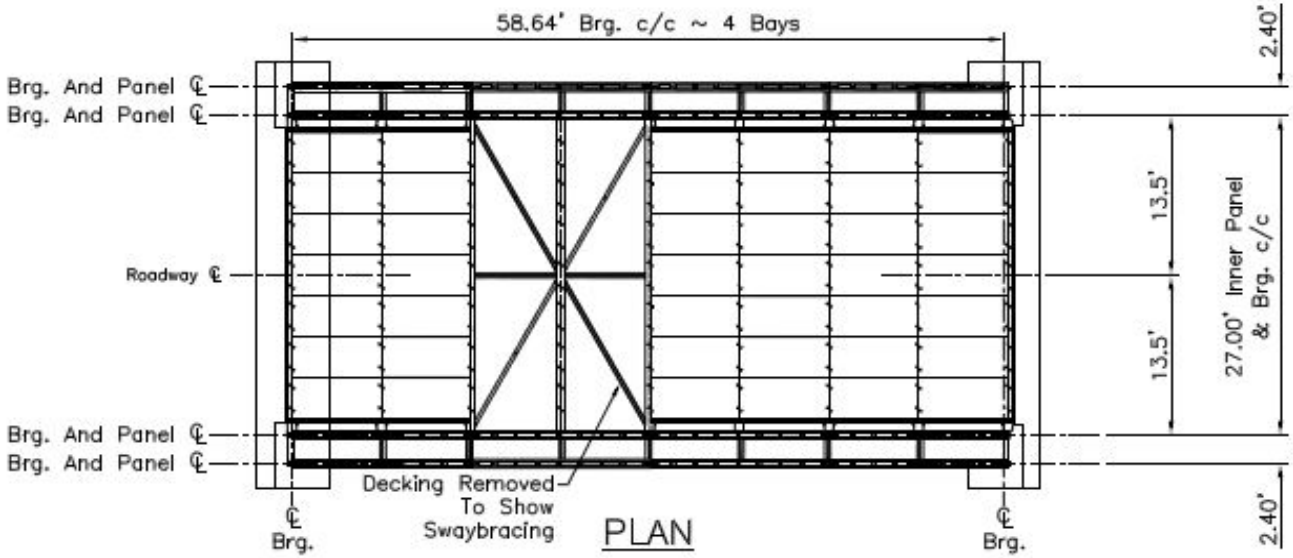

FOR ILLUSTRATION ONLY

NOTES:

1. Live Load is HS-20.
2. Abutments and anchor bolts by contractor.
3. Due to the nature of modular bridging, Dimensional tolerances can accumulate. Mabey Bridge recommends the following:
   a.)Construct backwalls after bridge is in place.
   b.)Cast 3" dia. voids at anchor bolt locations. Grout in anchor bolts after bridge is in position.
4. No drilling, welding, or alterations of any kind to Mabey-supplied equipment without written permission of Mabey Bridge and Shore, Inc. Engineering Dept. Equipment must be used in the manner intended, according to the supplied drawing(s) and calculations.
5. All expansion bearings shall be greased at installation.

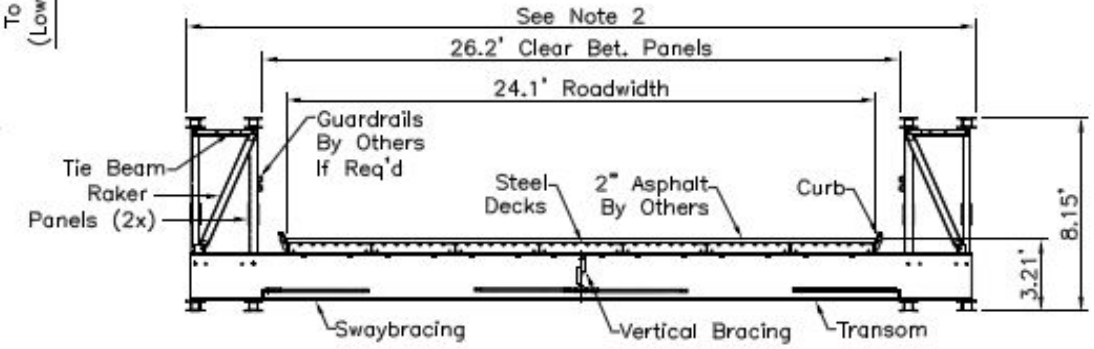

TYPICAL SECTION

GENERAL ARRANGEMENT ~ DSH ~ 24'RW ~ 4 BAYS

Dwg. No.:

Drawn By:

MABEY BRIDGE AND SHORE INC. 6770 Dorsey Rd. Elkridge, Md. 21075 Tel: (410)-379-2800 Fax: (410)-379-2801

Crane Assisted Launch/Delaunch

Procedure: (The Design Engineer determines the Weight of structure and location of C.o.G., and produces a table of Pick Weights and Radii, allowing the contractor to select an adequate crane and rigging.)

a. Build the Bridge on Rollers behind the Launch Abutment. Push the bridge (cantilever) to the point where the C.o.G. is 10' behind the Launch Rollers. At this point, attach the Crane securely to the front of the structure then rusume pushing forward. Adjust the cable and boom of the crane keeping the advancing load level. The pick weight increases proportionally as the bridge moves forward, to a maximum at the landing abutment where the bridge can be set down on bearings, timbers, or rollers.

b. For the Crane-Assisted Delaunch raise the structure onto rollers, attach the crane and reverse the above procedure. When the C.o.G. is safely behind the launch rollers, detach the crane.

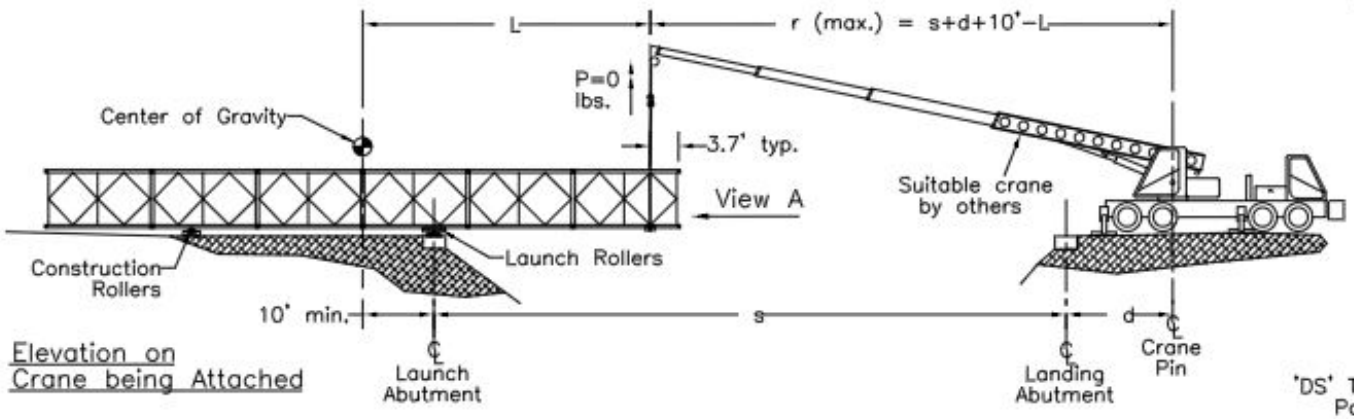

Elevation on Crane being Attached

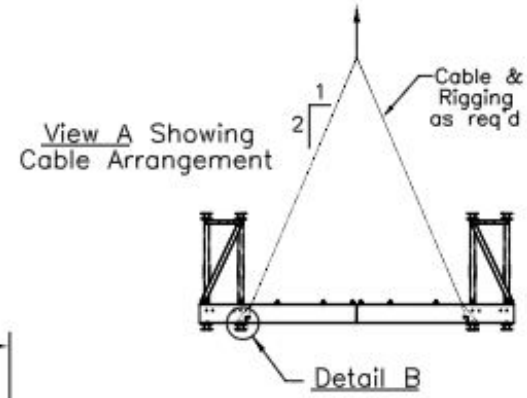

View A Showing Cable Arrangement

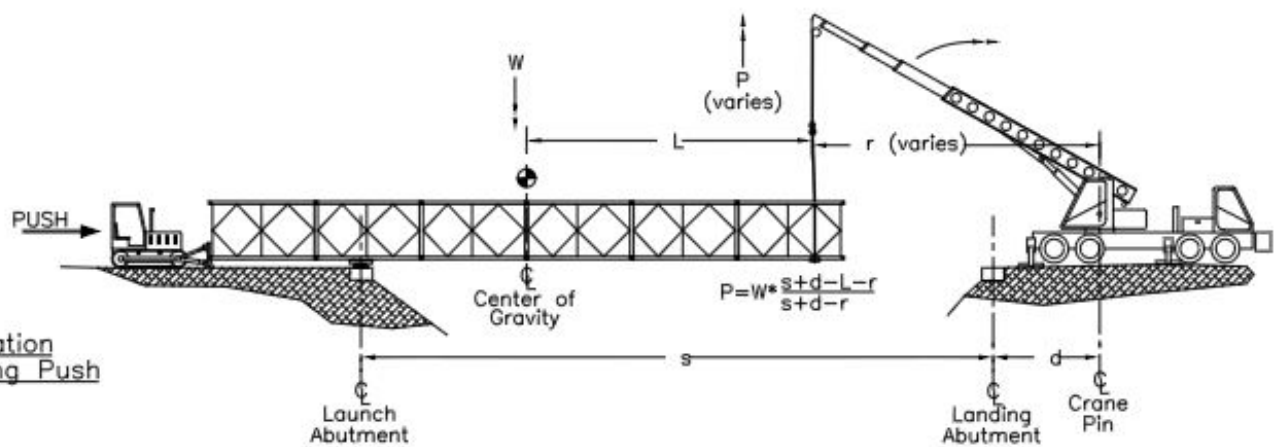

Elevation during Push

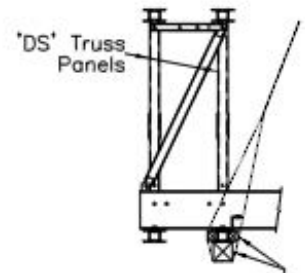

Detail B Showing Typ. Timber Softeners (Timber by contractor)

MABEY BRIDGE AND SHORE, INC.
6770 DORSEY RD.
BALTIMORE, MD. 21227
PH. (410) 379-2800
OR 1-800-42 "MABEY"
FAX (410) 379-2801

CIER ICE
VOLVO

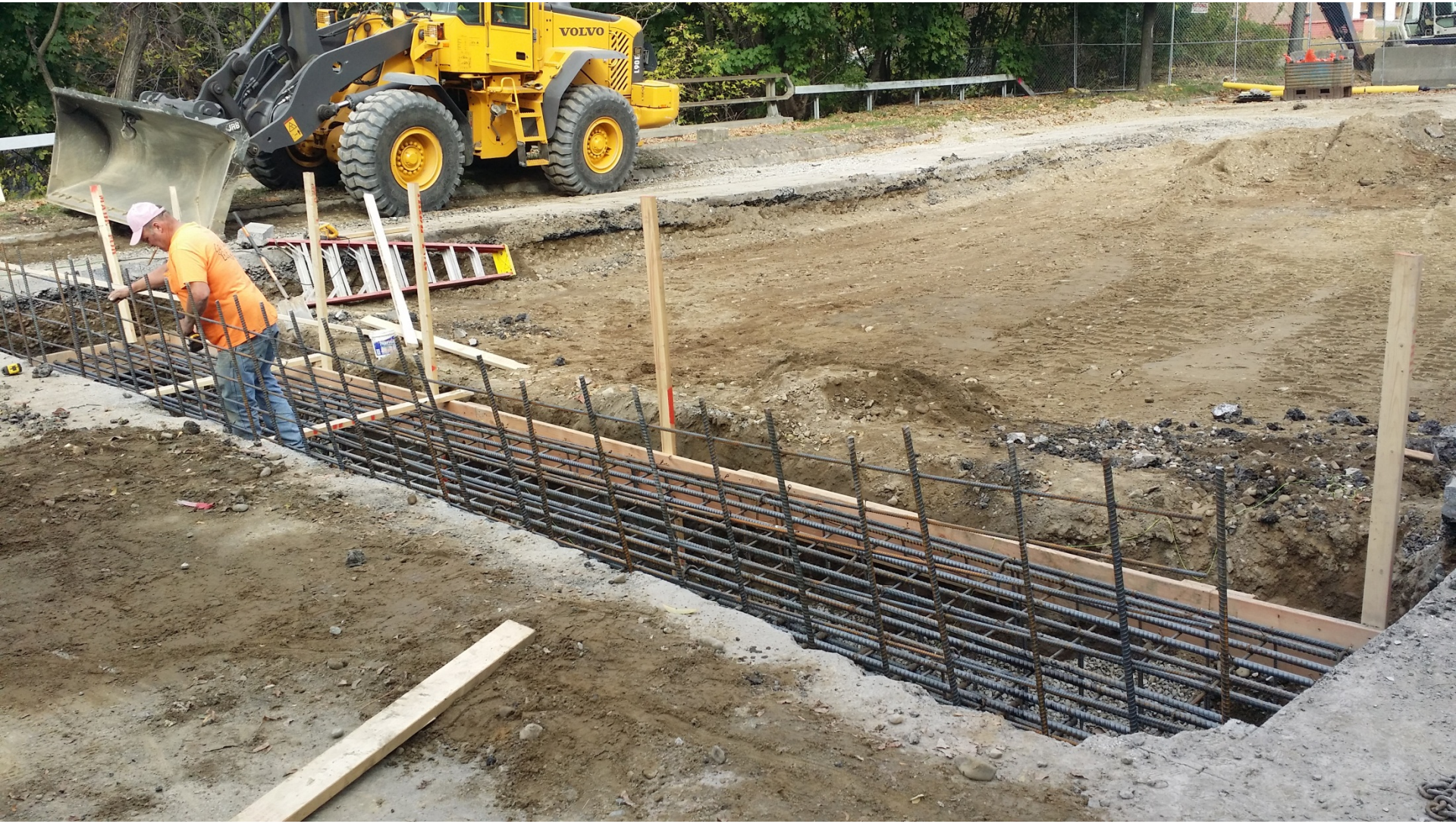
VOLVO

NATIONAL

DAEWOO

DANGER
NATIONAL
DAEWOO
SOLAR 170-III
AMERICAN SHORING INC.
800-407-4674
ARCTIC GLACIER ICE

Bridge Opened on December 9, 2014

Mill Street Bridge (BIN#2223610)

Closed by City on November 10, 2014

Current Bridge Status

- Bridge red flagged by NYSDOT in 2010 for undermining of footing
- Footing undermining increased in severity and NYSDOT issued another red flag in November 2014 prompting City to close bridge on November 10th
- Although the Mill Street Bridge is not a critical to vehicular traffic, it does have historic significance in Quassaick Creek corridor
- Pier-5 also retains the West Trunk Sewer main (54" brick main)
- Failure of undermined footing below Pier-5 could result in collapse of sewer main behind Pier

11.05.2014

11.05.2014

STA	READINGS (ft)							
YEAR	2013 (ft)		2014 (ft)					
	V	H	V	H				
0+00	0.8	2.7	0	0				
0+05	1.5	4.5	0.5	8.0				
0+10	1.6	5.0	0.8	8.0				
0+15	0.5	6.0	1.0	6.7				
0+20	1.5	5.5	1.3	3.0				
0+25	1.8	3.0	0.9	1.9				
0+30	1.4	2.0	1.0	2.9				
0+35	0.5	3.5	0	0				

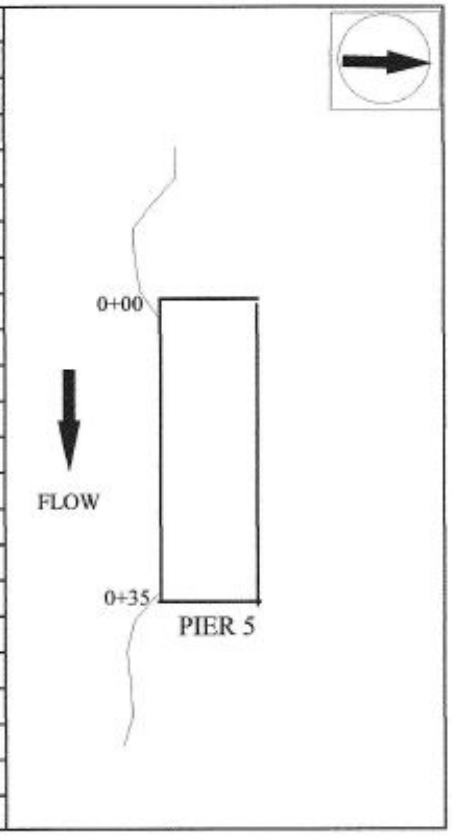

REFERENCE	YEAR	NOTES:
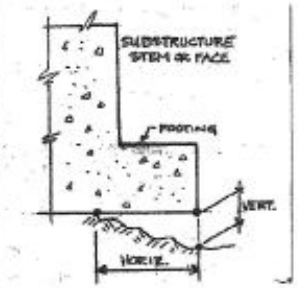		
	2013	New readings taken this inspection
	2014	Up to3.5 ft of addition undermining on west end of pier.

10/05/2012 07:03

10/05/2012 07:01

Next Steps

- DPW to install large rip-rap stone against footing to reduce further undermining
- Orange County has agreed to provide funding for a portion of the repair work
- Orange County CDBG money is pending for remainder of funds to construct repair
- Stream realignment project to return the path of the Quassaick Creek back through two bridge arches instead of the current single arch opening will reduce stream velocities and prevent scour of bridge footings
- Additional funding also needed to repair red flagged pedestrian sidewalks that were closed previously

Lake Drive Bridge (BIN#2223630)

Red Flagged by NYSDOT and Load Restricted to 3-Tons
(Future closure likely)

Current Bridge Status

- Bridge red flagged by NYSDOT in 2010 and in subsequent years thereafter heavy corrosion and perforations along invert (floor) of culvert pipes
- Corrosion of inverts have steadily progressed and heaving is apparent
- Some settlement of roadway above has occurred
- Corrosion is a threat to anyone who walks inside of culverts
- Further corrosion and upward movement of invert was apparent in latest NYSDOT inspection performed on 4/28/14
- Future road closure is likely

04/28/2014

APR 24 2012

04/28/2014

Next Steps

- No funding has been identified ($1,000,000) to replace this bridge
- Ideal solution would be to replace with a Con-Span precast bridge
- Con-Span Bridge would allow restoration of the stream bed of the Quassaick in this area

SAMPLE DRAWING ONLY

EXPRESS FOUNDATIONS

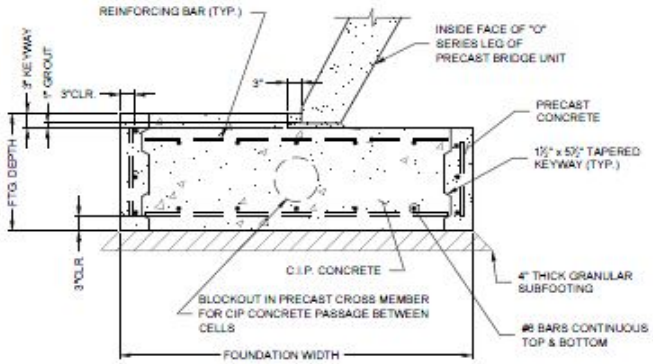

SECTION A
(NOT PROJECT SPECIFIC)

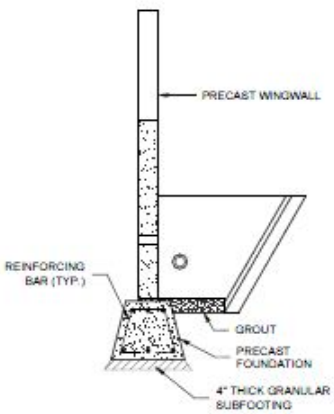

SECTION B
(NOT PROJECT SPECIFIC)

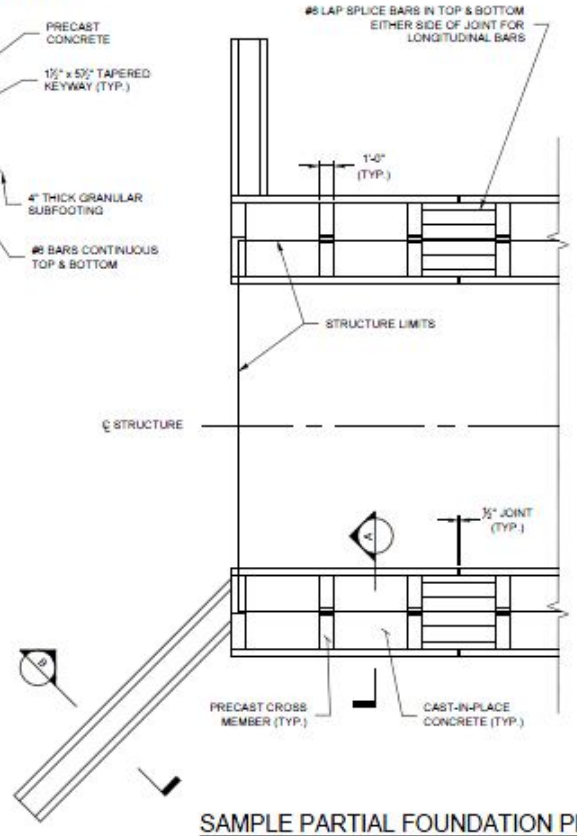

SAMPLE PARTIAL FOUNDATION PLAN
(NOT PROJECT SPECIFIC)

EXPRESS FOUNDATIONS

The design and information shown on this drawing is provided as a service to the project owner, engineer and contractor by Contech Engineered Solutions LLC ("Contech"). Neither this drawing, nor any part thereof, may be used, reproduced or modified in any manner without the prior written consent of Contech. Failure to comply is done at the user's own risk and Contech expressly disclaims any liability or responsibility for such use.

If discrepancies between the supplied information upon which the drawing is based and actual field conditions are encountered as site work progresses, these discrepancies must be reported to Contech immediately for re-evaluation of the design. Contech accepts no liability for designs based on missing, incomplete or inaccurate information supplied by others.

CONTECH ENGINEERED SOLUTIONS LLC
www.ContechES.com
9025 Centre Pointe Dr., Suite 400, West Chester, OH 45069
800-338-1122 513-645-7000 513-645-7993 FAX

CON/SPAN O-SERIES
CONTECH
DYOB
DRAWING

Lake Drive Culvert Replacement
CON/SPAN O-Series O638 38'-0" Span x 10'-8 1/8" Rise
1 Cell - 66' Long
Newburgh, New York

PROJECT No. 203889	SHEET No.	DATE 10/1/2014
DESIGNED DYOB		DRAWN DYOB
CHECKED DYOB		APPROVED DYOB
SHEET NO. 5 OF 5		

Walsh Road Bridge (BIN#2223620)

Red Flagged by NYSDOT
(Future lane restriction likely)

Current Bridge Status

- Bridge red flagged by NYSDOT in 2010 and in subsequent years thereafter for heavy corrosion and perforations outermost girders near bearing areas on abutments
- Beam seat area is substantial despite heavy corrosion in flange and web of girder
- Interior girders are in good condition
- Further corrosion and undermining of abutment footings were found in latest NYSDOT inspection performed in 2013

JUL 28 2010

12"
12"
6"
14"
JUL 29 2010

Next Steps

- Identify funding source (approx. $600,000) to rehabilitate this bridge
- Stabilization of abutments
- Replacement of bridge deck and exterior girders (2)
- Placement of rip-rap at abutment footings to prevent future undermining

Questions?