LIBERTY STREET
CDBG SIDEWALKS

BETWEEN ANN STREET AND BROADWAY
CITY OF NEWBURGH, ORANGE COUNTY, NEW YORK

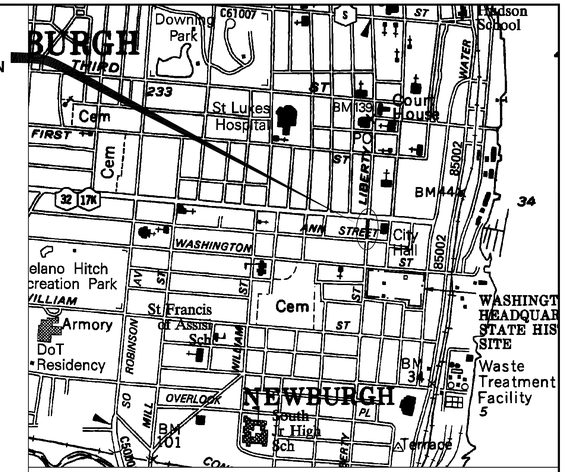

SITE LOCATION PLAN: NOT TO SCALE

JULY 13, 2016

DISCLAIMER:
The following plan set has been developed as the new City of Newburgh streetscape standarts, as of 2016. The specific location of the plan set refers to a section of Liberty Street between Broadway and Ann Street. the detailing provided included information to adapt the plans to all streets throughout the city and some may not be applicable to all streetscape projects. Therefore, the plan must be adapted to each individual streetscape project location in coordination with the City Engineer and the City Planner.

INDEX OF DRAWINGS

PAGE NO.	REV	SHEET NO.	DATE	DESCRIPTION
1		G-101	06/24/16	COVER SHEET
2		C-100	06/24/16	EXISTING CONDITIONS PLAN
3		C-101	06/24/16	DEMOLITION PLAN
4		C-102	06/24/16	SITE LAYOUT PLAN
5		C-103	04/05/16	SITE GRADING PLAN
6		C-104	04/05/16	UTILITY AND E&SC PLAN
7		C-105	04/05/16	LANDSCAPING, MATERIALS & SIGNAGE PLAN
8		C-501	04/05/16	SITE DETAILS
9		C-502	04/05/16	SITE DETAILS
10		C-505	06/24/16	R.O.W BIOSWALE DETAILS
11		C-506	06/24/16	R.O.W BIOSWALE DETAILS
12		C-510	06/24/16	E&SC NOTES AND DETAILS
13		C-515	06/24/16	UTILITY DETAILS
14		C-516	06/24/16	WATER DETAILS
15		C-520	06/24/16	LANDSCAPING NOTES AND DETAILS

ZONING DISTRICTS:
BC: BROADWAY COORIDOR

IT IS A VIOLATION OF LAW FOR ANY PERSON, UNLESS THEY ARE ACTING UNDER THE DIRECTION OF A LICENSED PROFESSIONAL ENGINEER, ARCHITECT, LANDSCAPE ARCHITECT, OR LAND SURVEYOR, TO ALTER AN ITEM IN ANY WAY. IF AN ITEM BEARING THE STAMP OF A LICENSED PROFESSIONAL IS ALTERED, THE ALTERING ENGINEER, ARCHITECT, LANDSCAPE ARCHITECT, OR LAND SURVEYOR SHALL STAMP THE DOCUMENT AND INCLUDE THE NOTATION "ALTERED BY" FOLLOWED BY THEIR SIGNATURE, THE DATE OF SUCH ALTERATION, AND A SPECIFIC DESCRIPTION OF THE ALTERATION.

NO.	REVISIONS			NO.	REVISIONS		
	BY:	CHK:	APP'D:		BY:	CHK:	APP'D:
	BY:	CHK:	APP'D:		BY:	CHK:	APP'D:
	BY:	CHK:	APP'D:		BY:	CHK:	APP'D:
	BY:	CHK:	APP'D:		BY:	CHK:	APP'D:

SEAL OF THE CITY OF NEWBURGH INCORPORATED 1865

LIBERTY STREET
CDBG SIDEWALKS
BETWEEN ANN STREET AND BROADWAY
CITY OF NEWBURGH, ORANGE COUNTY, NEW YORK

DESIGNED BY:	APPROVED BY:
DRAFTED BY:	DATE:
CHECKED BY:	PROJECT NO.

SHEET TITLE: **COVER SHEET**

SHEET NUMBER: **G-101**

EXISTING CONDITIONS NOTES:

GENERAL NOTES:

1. UNDERGROUND FACILITIES AND STRUCTURES SHOWN HEREON WERE TAKEN FROM DATA OBTAINED FROM PREVIOUS MAPS AND RECORD DRAWINGS. ALL ABOVE GROUND STRUCTURES AND SURFACE FEATURES SHOWN HEREON ARE THE RESULT OF A FIELD SURVEY UNLESS OTHERWISE NOTED. THERE MAY BE OTHER UNDERGROUND UTILITIES, THE EXISTENCE OF WHICH ARE NOT KNOWN OR CERTIFIED BY THE UNDERSIGNED. THE SIZE AND LOCATION OF ALL UNDERGROUND UTILITIES AND STRUCTURES MUST BE VERIFIED BY THE APPROPRIATE AUTHORITIES. THE UNDERGROUND FACILITIES PROTECTIVE ORGANIZATION MUST BE NOTIFIED PRIOR TO CONDUCTION TEST BORINGS, EXCAVATION AND CONSTRUCTION.

SURVEY REFERENCE:

1. "TOPOGRAPHIC SURVEY OF A PORTION OF LIBERTY STREET" PREPARED BY AUSFELD & WALDRUFF LAN SURVEYS LLP, DATED DECEMBER 29, 2015.

MAP REFERENCES:

1. "LOT LINE CHANGE FOR LANDS OF SAFE HARBORS OF THE HUDSON, INC.." PREPARED BY MARGARET HILLRIEGEL, DATED MARCH 31, 2004, LAST REVISED JUNE 10, 2004 AND FILED IN THE ORANGE COUNTY CLERKS OFFICE AS MAP 567-04.

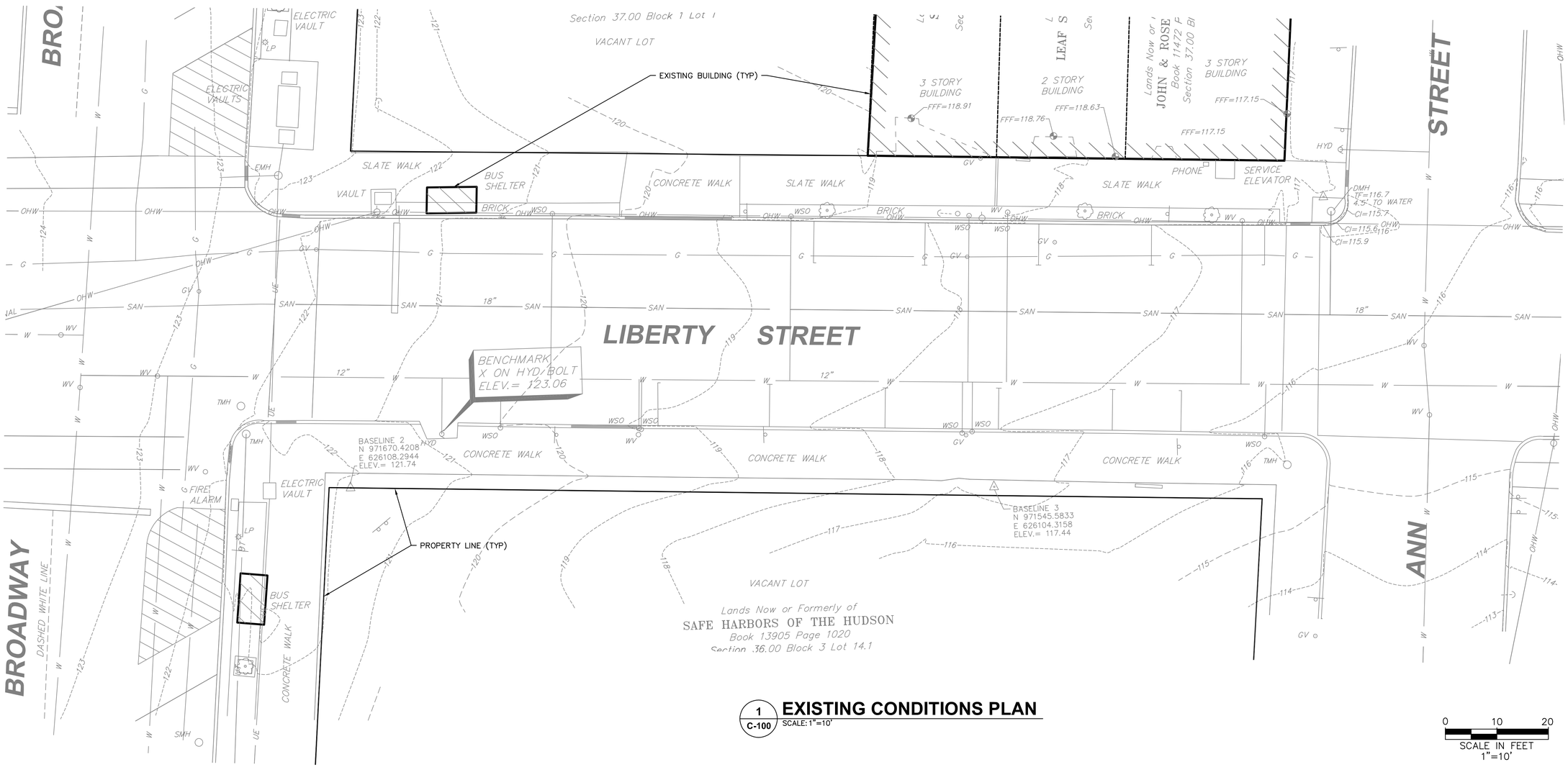

1 C-100 **EXISTING CONDITIONS PLAN**
SCALE: 1"=10'

0 10 20
SCALE IN FEET
1"=10'

Jul 13,2016 - 5:34pm
E:\2015\2015048.01 Newburgh Liberty St\CADD\Newburgh City Standards\2015048.01 C-100 Existing Conditions Plan.dwg

36x24 PLOT SHEET

CITY OF NEWBURGH
83 BROADWAY
NEWBURGH, NY 12550
TEL: (845) 569-7300

THE ALTERATION OF THIS MATERIAL IN ANY WAY, UNLESS UNDER THE DIRECTION OF A PROFESSIONAL ENGINEER, IS A VIOLATION OF SECTION 7209, SUBDIVISION 2, OF THE NEW YORK STATE LAW AND IS A CLASS "A" MISDEMEANOR.

CONTRACT PHASE:
CONSTRUCTION DOCUMENTS

DATE:
JULY 13, 2016

ADDENDA/REVISIONS

NO.	NAME	DATE

THIS DRAWING REFLECTS ALL CHANGES PREVIOUSLY MADE ON THIS SHEET. VERIFY THAT PREVIOUS CHANGES HAVE BEEN INCORPORATED INTO THE CONTRACT BEFORE PROCEEDING WITH ANY WORK NOT SPECIFICALLY REFERENCED BY THIS REVISION.

PROJECT NUMBER:
DESIGNED BY:
DRAWN BY:
CHECKED BY:

PROJECT TITLE:
LIBERTY STREET CDBG SIDEWALKS

LOCATION:
LIBERTY STREET
CITY OF NEWBURGH
ORANGE COUNTY, NEW YORK

OWNER:
CITY OF NEWBURGH

SHEET TITLE:
EXISTING CONDITIONS PLAN

DRAWING NUMBER:
C-100

SHEET 2 OF 15

DEMOLITION LEGEND:

- DISTURBANCE LIMITS
- SAWCUT LIMITS
- EXISTING LINEAR ELEMENT TO BE REMOVED
- EXISTING PAVEMENT AREA TO BE REMOVED
- EXISTING TREE TO BE REMOVED

DEMOLITION NOTES:

1. REFER TO REQUIREMENTS OUTLINED IN THE EROSION & SEDIMENT CONTROL PLANS & NOTES PRIOR TO COMMENCEMENT OF WORK.
2. CONFORM TO APPLICABLE CODE AND PERMIT REQUIREMENTS FOR DEMOLITION OF STRUCTURES, SAFETY OF ADJACENT STRUCTURES, DUST CONTROL, RUNOFF CONTROL, AND HAULING, DISPOSAL AND STORAGE OF DEBRIS.
3. PROVIDE, ERECT AND MAINTAIN TEMPORARY BARRIERS AND SECURITY DEVICES AS REQUIRED.
4. MAINTAIN EXISTING UTILITIES TO REMAIN IN SERVICE AND PROTECT THEM AGAINST DAMAGE DURING SELECT DEMOLITION OPERATIONS. DO NOT INTERRUPT EXISTING UTILITIES SERVING OPERATING FACILITIES, EXCEPT WHEN AUTHORIZED IN WRITING BY OWNER AND AUTHORITIES HAVING JURISDICTION.
5. NOTIFY ADJACENT OWNERS OF WORK THAT MAY AFFECT THEIR PROPERTY, POTENTIAL NOISE, UTILITY OUTAGE, OR DISRUPTION. COORDINATE WITH OWNER.
6. LOCATE AND IDENTIFY ALL EXISTING UTILITIES WITHIN THE CONSTRUCTION AREA. DISCONNECT AND SEAL OR CAP OFF UTILITY SERVICES THAT WILL BE AFFECTED BY THIS PROJECT. NOTIFY AFFECTED UTILITY COMPANIES BEFORE STARTING WORK AND COMPLY WITH THEIR REQUIREMENTS. VERIFY THAT UTILITIES HAVE BEEN DISCONNECTED AND CAPPED.
7. DEMOLISH AND REMOVE COMPONENTS IN AN ORDERLY AND CAREFUL MANNER.
8. PROTECT EXISTING FEATURES THAT ARE NOT TO BE DEMOLISHED.
9. CONDUCT OPERATIONS WITH MINIMUM INTERFERENCE TO PUBLIC OR PRIVATE ACCESSES.
10. MAINTAIN EGRESS AND ACCESS AT ALL TIMES. DO NOT CLOSE OR OBSTRUCT ROADWAYS OR SIDEWALK WITHOUT PERMITS. COORDINATE WITH AUTHORITY HAVING JURISDICTION.
11. CEASE OPERATIONS IMMEDIATELY IF ADJACENT STRUCTURES APPEAR TO BE IN DANGER. NOTIFY AUTHORITY HAVING JURISDICTION.
12. ROUGH GRADE AND COMPACT AREAS AFFECTED BY DEMOLITION TO MAINTAIN SITE GRADES AND CONTOURS, AND PROVIDE POSITIVE DRAINAGE.
13. FIELD VERIFY EXISTING CONDITIONS AND CORRELATE WITH REQUIREMENTS INDICATED ON DEMOLITION PLAN TO DETERMINE EXTENT OF SELECTIVE DEMOLITION REQUIRED.
14. CONDUCT DEMOLITION OPERATIONS TO PREVENT INJURY TO PEOPLE AND DAMAGE TO ADJACENT BUILDINGS AND FACILITIES TO REMAIN. ENSURE SAFE PASSAGE OF PEOPLE AROUND SELECTIVE DEMOLITION AREA.
15. USE WATER MIST, TEMPORARY ENCLOSURES AND OTHER SUITABLE METHODS TO LIMIT THE SPREAD OF DUST AND DIRT. COMPLY WITH GOVERNING ENVIRONMENTAL PROTECTION REGULATIONS. DO NOT USE WATER WHEN IT MAY DAMAGE EXISTING CONSTRUCTION, SUCH AS CAUSING ICING, FLOODING, AND TRANSPORTING POLLUTANTS.
16. CLEAN ADJACENT STRUCTURES AND IMPROVEMENTS OF DUST, DIRT AND DEBRIS CAUSED BY SELECTIVE DEMOLITION OPERATIONS. RETURN ADJACENT AREAS TO CONDITION EXISTING BEFORE START OF DEMOLITION.
17. PROMPTLY DISPOSE OF DEMOLISHED MATERIALS. ALL DEBRIS RESULTING FROM DEMOLITION ACTIVITIES SHALL BE DISPOSED OF OFF–SITE AT A FACILITY APPROVED TO RECEIVE THE DEBRIS. DO NOT ALLOW DEMOLISHED MATERIALS TO ACCUMULATE ON–SITE. DO NOT BURN DEMOLISHED MATERIALS ON–SITE.
18. REMOVE AND TRANSPORT DEBRIS IN A MANNER THAT WILL PREVENT SPILLAGE ON ADJACENT SURFACES AND AREAS.
19. ALL WATER MAIN WORK SHALL BE COORDINATED WITH THE CITY OF NEWBURGH WATER DEPARTMENT BEFORE CONSTRUCTION.

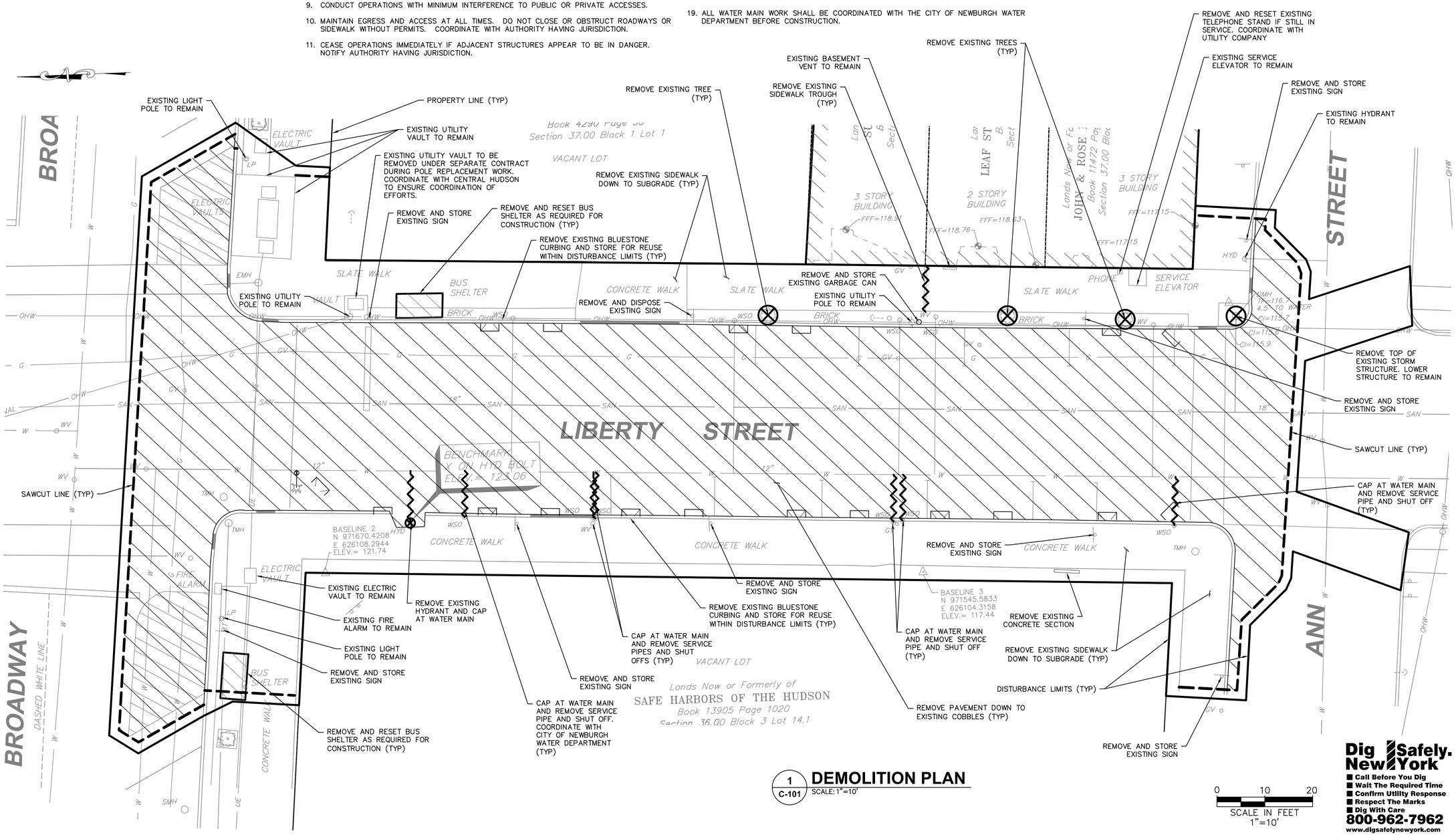

1 C-101 **DEMOLITION PLAN**
SCALE: 1"=10'

0 10 20
SCALE IN FEET
1"=10'

Dig Safely. New York
- Call Before You Dig
- Wait The Required Time
- Confirm Utility Response
- Respect The Marks
- Dig With Care

800-962-7962
www.digsafelynewyork.com

CITY OF NEWBURGH
83 BROADWAY
NEWBURGH, NY 12550
TEL: (845) 569-7300

THE ALTERATION OF THIS MATERIAL IN ANY WAY, UNLESS UNDER THE DIRECTION OF A PROFESSIONAL ENGINEER, IS A VIOLATION OF SECTION 7209, SUBDIVISION 2, OF THE NEW YORK STATE LAW AND IS A CLASS "A" MISDEMEANOR.

CONTRACT PHASE:
CONSTRUCTION DOCUMENTS

DATE:
JULY 13, 2016

ADDENDA/REVISIONS

NO.	NAME	DATE

THIS DRAWING REFLECTS ALL CHANGES PREVIOUSLY MADE ON THIS SHEET. VERIFY THAT PREVIOUS CHANGES HAVE BEEN INCORPORATED INTO THE CONTRACT BEFORE PROCEEDING WITH ANY WORK NOT SPECIFICALLY REFERENCED BY THIS REVISION.

PROJECT NUMBER:
DESIGNED BY:
DRAWN BY:
CHECKED BY:

PROJECT TITLE:
LIBERTY STREET CDBG SIDEWALKS

LOCATION:
LIBERTY STREET
CITY OF NEWBURGH
ORANGE COUNTY, NEW YORK

OWNER:
CITY OF NEWBURGH

SHEET TITLE:
DEMOLITION PLAN

DRAWING NUMBER:
C-101

SHEET 3 OF 15

Jul 13,2016 – 5:14pm
E:\2015\2015048.01 Newburgh Liberty St\CADD\Newburgh City Standards\2015048.01 C-101 Demolition Plan.dwg
36x24 PLOT SHEET

SITE PLAN LEGEND:

- DISTURBANCE LIMITS
- PROPOSED ASPHALT PAVEMENT
- PROPOSED CONCRETE CURBING
- (12) PROPOSED PARKING COUNT

GENERAL CONSTRUCTION NOTES:

1. THE CONTRACTOR SHALL PROTECT EXISTING PROPERTY LINE MONUMENTATION. ANY MONUMENTATION DISTURBED OR DESTROYED, AS JUDGED BY THE ENGINEER OR OWNER, SHALL BE REPLACED AT THE CONTRACTOR'S EXPENSE AND UNDER THE SUPERVISION OF A NEW YORK STATE LICENSED LAND SURVEYOR.
2. NOTIFY CITY ENGINEER 48 HOURS PRIOR TO INITIALIZATION OF ANY WORK ON SITE.
3. THE CITY ENGINEER SHALL BE NOTIFIED IN WRITING OF ANY CONDITIONS THAT VARY FROM THOSE SHOWN ON THE PLANS. THE CONTRACTOR'S WORK SHALL NOT VARY FROM THE PLANS WITHOUT PRIOR REVIEW FROM THE CITY ENGINEER.
4. CONTRACTOR IS RESPONSIBLE FOR EMPLOYING AND MAINTAINING ALL TRAFFIC CONTROL AND SAFETY MEASURES DURING CONSTRUCTION. A DETAILED MAINTENANCE AND PROTECTION OF TRAFFIC PLAN SHALL BE SUBMITTED FOR APPROVAL TO THE CITY OF NEWBURGH BEFORE BEGINNING CONSTRUCTION. COORDINATE WITH CITY POLICE AND FIRE DEPARTMENT FOR ROAD CLOSURES.
5. CONTRACTOR IS RESPONSIBLE FOR PROPERLY & SAFELY MAINTAINING AREA BETWEEN ALL ADJOINING PROPERTIES.
6. NO WORK, STORAGE OR TRESPASS SHALL BE PERMITTED BEYOND THE SITE PROPERTY LINES OR PUBLIC RIGHT-OF-WAY.
7. ALL EXISTING LAWN AREA, CURBING, PAVING, SIDEWALKS, CULVERTS OR OTHER PUBLIC OR PRIVATE PROPERTY DAMAGED BY TRENCHING OR EXCAVATION OPERATIONS SHALL BE REPLACED OR REPAIRED TO A CONDITION EQUAL TO EXISTING, AS DESCRIBED IN CONTRACT DOCUMENTS OR AS ORDERED BY THE CITY ENGINEER (AOBE). MAILBOXES, SIGN POSTS, ETC SHALL BE PROTECTED OR REMOVED AND REPLACED EXACTLY AS THEY WERE BEFORE BEING DISTURBED. REMOVE AND REPLACE AFFECTED CURBING AND SIDEWALK TO NEAREST JOINT. REMOVE PAVEMENT AND REPLACE TO SAW CUT LINE, SAW CUT IN STRAIGHT LINE TO POINT NEEDED TO BLEND GRADE, REMOVE LAWN AND REPLACE TO MINIMUM LIMIT OF EXCAVATION.
8. CONTRACTOR SHALL EVALUATE EXISTING CONDITIONS OF ALL STORMWATER CATCH BASINS IDENTIFIED FOR SEDIMENT PROTECTION AND REPORT TO THE CITY ENGINEER BEFORE BEGINNING CONSTRUCTION AND ESTABLISHING SEDIMENT CONTROLS.

PAVING:

1. NO VEHICULAR TRAFFIC OF ANY SORT SHALL BE PERMITTED ON THE SURFACE OF SUBBASE COURSE MATERIAL ONCE IT HAS BEEN FINE GRADED, COMPACTED, AND IS READY FOR PAVING. SUBBASE MATERIAL SO PREPARED FOR PAVING SHALL BE PAVED WITHIN THREE DAYS OF PREPARATION.
2. SUBBASE MATERIAL AND THE VARIOUS ASPHALT CONCRETE MATERIALS CALLED FOR IN THESE DRAWINGS SHALL CONFORM WITH THE REFERENCED SECTION OF THE NEW YORK STATE DEPARTMENT OF TRANSPORTATION STANDARD SPECIFICATIONS FOR CONSTRUCTION AND MATERIALS, DATED JANUARY 1, 2016, INCLUDING ALL REVISIONS AND ADDENDUMS. CONSTRUCTION SHALL BE AS FURTHER SET FORTH IN THOSE SPECIFICATIONS AND AS OTHERWISE PROVIDED FOR IN THESE DRAWINGS.
3. PLACE ASPHALT CONCRETE MIXTURE ON PREPARED SURFACE, SPREAD AND STRIKE-OFF USING A SELF-PROPELLED PAVING MACHINE, WITH VIBRATING SCREED. PLACEMENT IN INACCESSIBLE AND SMALL AREAS MAY BE BY HAND.
4. PROVIDE JOINTS BETWEEN OLD AND NEW PAVEMENTS OR BETWEEN SUCCESSIVE DAY'S WORK.
5. TACK COAT WHEN SPECIFIED OR CALLED OUT ON THE DRAWINGS OR REQUIRED BY THE REFERENCED SPECIFICATION SHALL CONFORM WITH THE FOLLOWING:
   - A. TACK COAT SHALL MEET THE MATERIAL REQUIREMENTS OF 702-90 ASPHALT EMULSION FOR TACK COAT OF THE NEW YORK STATE DEPARTMENT OF TRANSPORTATION STANDARD SPECIFICATIONS FOR CONSTRUCTION AND MATERIALS, DATED JANUARY 1, 2016, SHALL BE APPLIED IN ACCORDANCE WITH SECTION 407 – TACK COAT SHALL BE IN ACCORDANCE WITH THOSE SPECIFICATIONS AND AS OTHERWISE PROVIDED FOR IN THESE DRAWINGS.
   - B. REMOVE LOOSE AND FOREIGN MATERIAL FROM ASPHALT SURFACE BEFORE PAVING NEXT COURSE. USE POWER BROOMS, BLOWERS OR HAND BROOM.
   - C. APPLY TACK COAT TO ASPHALT PAVEMENT SURFACES AND SURFACES OF CURBS BELOW PAVEMENT LEVEL, GUTTERS, MANHOLES, AND OTHER STRUCTURES PROJECTING INTO OR ABUTTING PAVEMENT. DRY TO A "TACKY" CONSISTENCY BEFORE PAVING.
   - D. TACK COAT ENTIRE VERTICAL SURFACE OF ABUTTING EXISTING PAVEMENT.
6. AFTER COMPLETION OF PAVING AND SURFACING OPERATIONS, CLEAN SURFACES OF EXCESS OR SPILLED ASPHALT, GRAVEL OR STONE MATERIALS TO THE SATISFACTION OF THE CITY ENGINEER.

LAYOUT :

1. THE CONTRACTOR SHALL BE RESPONSIBLE FOR COORDINATING ALL FIELD LAYOUT. THE CONTRACTOR SHALL TAKE TIES TO ALL UTILITY CONNECTIONS AND PROVIDE MARKED-UP AS BUILT PLANS FOR ALL UTILITIES SHOWING TIES TO CONNECTIONS, BENDS, VALVES, LENGTHS OF LINES AND INVERTS. AS-BUILT PLANS SHALL BE REVIEWED BY THE CITY ENGINEER AND THE CONTRACTOR SHALL PROVIDE ANY CORRECTION OR ADMISSIONS TO THE SATISFACTION OF THE CITY ENGINEER BEFORE UTILITIES WILL BE ACCEPTED.

STRIPING:

1. STRIPE PAVEMENT AS INDICATED ON THE PLANS AND/OR IN ACCORDANCE WITH ALL APPLICABLE LOCAL, STATE AND FEDERAL REQUIREMENTS.
2. COLOR: DRIVE LANE DIVIDERS – WHITE OR AOBE
   NO PARKING ZONE WARNINGS – WHITE OR AOBE
   PARKING DIVIDERS – WHITE OR AOBE
   WALKING LINES – WHITE OR AOBE
   HANDICAP PARKING LINES & SYMBOL – BLUE

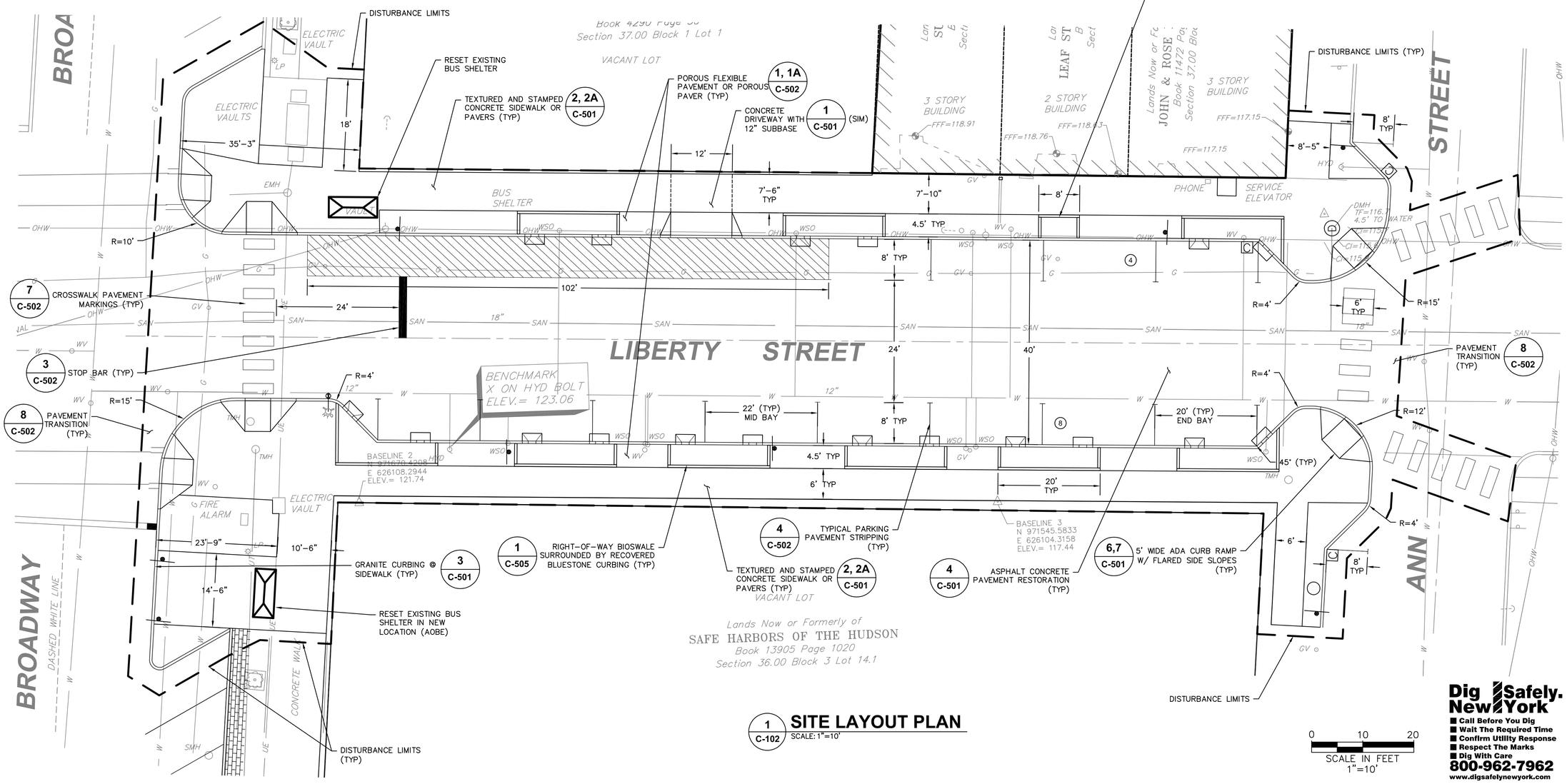

1 C-102 **SITE LAYOUT PLAN**
SCALE: 1"=10'

0 10 20
SCALE IN FEET
1"=10'

Dig Safely. New York
■ Call Before You Dig
■ Wait The Required Time
■ Confirm Utility Response
■ Respect The Marks
■ Dig With Care
800-962-7962
www.digsafelynewyork.com

CITY OF NEWBURGH
83 BROADWAY
NEWBURGH, NY 12550
TEL: (845) 569-7300

THE ALTERATION OF THIS MATERIAL IN ANY WAY, UNLESS UNDER THE DIRECTION OF A PROFESSIONAL ENGINEER, IS A VIOLATION OF SECTION 7209, SUBDIVISION 2, OF THE NEW YORK STATE LAW AND IS A CLASS "A" MISDEMEANOR.

CONTRACT PHASE:
CONSTRUCTION DOCUMENTS

DATE:
JULY 13, 2016

ADDENDA/REVISIONS

NO.	NAME	DATE

THIS DRAWING REFLECTS ALL CHANGES PREVIOUSLY MADE ON THIS SHEET. VERIFY THAT PREVIOUS CHANGES HAVE BEEN INCORPORATED INTO THE CONTRACT BEFORE PROCEEDING WITH ANY WORK NOT SPECIFICALLY REFERENCED BY THIS REVISION.

PROJECT NUMBER:
DESIGNED BY:
DRAWN BY:
CHECKED BY:

PROJECT TITLE:
LIBERTY STREET CDBG SIDEWALKS

LOCATION:
LIBERTY STREET
CITY OF NEWBURGH
ORANGE COUNTY, NEW YORK

OWNER:
CITY OF NEWBURGH

SHEET TITLE:
SITE LAYOUT PLAN

DRAWING NUMBER:
C-102

SHEET 4 OF 15

Jul 13,2016 – 5:15pm
E:\2015\2015048.01 Newburgh Liberty St\CADD\Newburgh City Standards\2015048.01 C-102 Site Layout Plan.dwg
36x24 PLOT SHEET

GRADING PLAN LEGEND:

- DISTURBANCE LIMITS
- 119 — PROPOSED 1 FT CONTOURS
- 120 — PROPOSED 5 FT CONTOURS
- 121.07 — PROPOSED SPOT ELEVATION

ABBREVIATIONS:

TF	TOP OF FRAME
HP	HIGH POINT
LP	LOW POINT
TC	TOP OF CURB
BC	BOTTOM OF CURB
INV	INVERT
ME	MATCH EXISTING
EL	SPOT ELEVATION

GRADING NOTES:

1. PRIOR TO SITE DISTURBANCE, CONTRACTOR TO INSTALL EROSION & SEDIMENT CONTROL MEASURES.
2. ALL EARTHWORK SHALL BE SMOOTHLY AND EVENLY BLENDED INTO EXISTING CONDITIONS. NO WORK, STORAGE OR TRESPASS SHALL BE PERMITTED BEYOND THE BOUNDARIES OF ANY EASEMENT OR PROPERTY LINE.
3. RAISE ALL EXISTING UTILITY COVERS TO MATCH PROPOSED GRADES FLUSH.

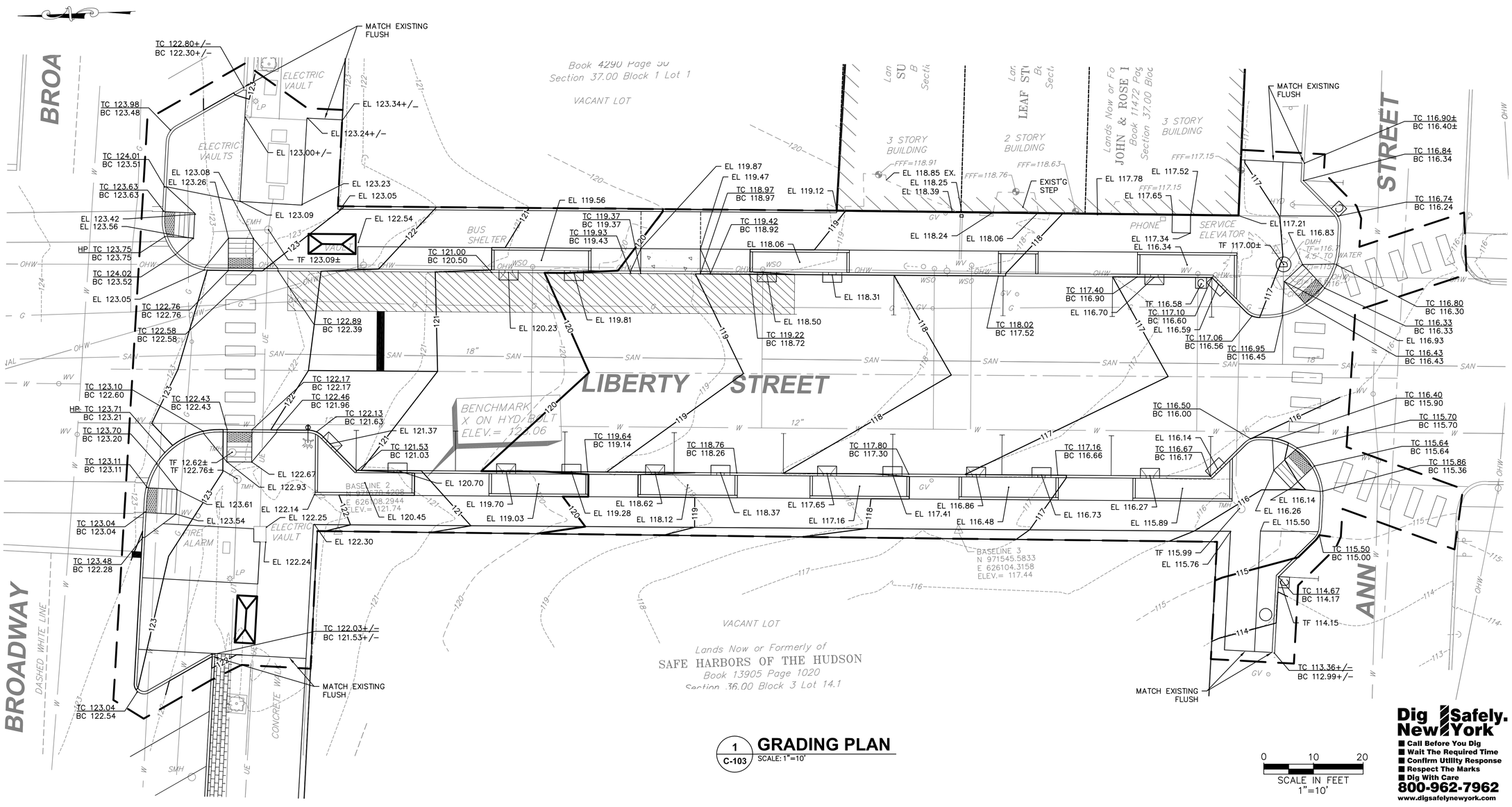

1 / C-103 **GRADING PLAN**
SCALE: 1"=10'

0 10 20
SCALE IN FEET
1"=10'

Dig Safely. New York
- Call Before You Dig
- Wait The Required Time
- Confirm Utility Response
- Respect The Marks
- Dig With Care

800-962-7962
www.digsafelynewyork.com

CITY OF NEWBURGH
83 BROADWAY
NEWBURGH, NY 12550
TEL: (845) 569-7300

THE ALTERATION OF THIS MATERIAL IN ANY WAY, UNLESS UNDER THE DIRECTION OF A PROFESSIONAL ENGINEER, IS A VIOLATION OF SECTION 7209, SUBDIVISION 2, OF THE NEW YORK STATE LAW AND IS A CLASS "A" MISDEMEANOR.

CONTRACT PHASE:
CONSTRUCTION DOCUMENTS

DATE:
JULY 13, 2016

ADDENDA/REVISIONS

NO.	NAME	DATE

THIS DRAWING REFLECTS ALL CHANGES PREVIOUSLY MADE ON THIS SHEET. VERIFY THAT PREVIOUS CHANGES HAVE BEEN INCORPORATED INTO THE CONTRACT BEFORE PROCEEDING WITH ANY WORK NOT SPECIFICALLY REFERENCED BY THIS REVISION.

PROJECT NUMBER:
DESIGNED BY:
DRAWN BY:
CHECKED BY:

PROJECT TITLE:
LIBERTY STREET
CDBG SIDEWALKS

LOCATION:
LIBERTY STREET
CITY OF NEWBURGH
ORANGE COUNTY, NEW YORK

OWNER:
CITY OF NEWBURGH

SHEET TITLE:
GRADING PLAN

DRAWING NUMBER:
C-103

SHEET 5 OF 15

Jul 13,2016 – 5:16pm
E:\2015\2015048.01 Newburgh Liberty St\CADD\Newburgh City Standards\2015048.01 C-103 Site Grading Plan.dwg
36x24 PLOT SHEET

UTILITY AND E&SC LEGEND:

- DISTURBANCE LIMITS
- ST — PROPOSED STORMWATER PIPE
- PROPOSED UNDERDRAIN
- UE — PROPOSED UNDERGROUND ELECTRIC
- SF — TEMPORARY SILT FENCE
- PROPOSED ORNAMENTAL STREET LIGHT
- C — PROPOSED CATCH BASIN
- TEMPORARY OUT OF PAVEMENT FILTER FABRIC DROP INLET PROTECTION

GENERAL NOTES:

1. SEE SHEET C-520 FOR EROSION & SEDIMENT CONTROL NOTES AND DETAILS.

UTILITY NOTES:

1. ALL UNDERGROUND UTILITIES ARE SHOWN IN THEIR RELATIVE POSITION AND ARE FOR INFORMATIONAL PURPOSES ONLY. CONTRACTOR TO VERIFY THEIR ACTUAL LOCATION IN THE FIELD PRIOR TO THE COMMENCEMENT OF CONSTRUCTION.
2. ANY CONDITION ENCOUNTERED IN THE FIELD DIFFERING FROM THOSE SHOWN HEREON, SHALL BE REPORTED TO THE CITY ENGINEER BEFORE CONSTRUCTION IS TO PROCEED.
3. ALL STORM SEWER SHALL BE SMOOTH INTERIOR HDPE UNLESS OTHERWISE SPECIFIED.
4. ALL WATER PIPE SHALL BE CLASS 52 DUCTILE IRON PIPE UNLESS OTHERWISE SPECIFIED.
5. CONTRACTOR TO VERIFY STATUS OF ALL UTILITY SERVICES PRIOR TO INTERRUPTION.
6. EXPLORATORY EXCAVATIONS SHALL BE PERFORMED BY THE CONTRACTOR AT ALL UTILITY CONNECTION LOCATIONS AND AS NEEDED TO VERIFY EXISTING CONDITIONS PRIOR TO PERFORMING WORK.
7. BEFORE CONSTRUCTION LINES TO CONNECT TO EXISTING UTILITIES, VERIFY EXISTING UTILITY INVERTS AND NOTIFY THE ENGINEER IF ANY VARIATION FROM THE PLAN IS REQUIRED.
8. THE CONTRACTOR SHALL MAINTAIN ALL EXISTING UTILITIES IN SERVICE FOR THE DURATION OF THE WORK.
9. THE CONTRACTOR SHALL COMPLY WITH ALL REQUIRED PERMITS AND ASSOCIATED CONDITIONS.
10. CONTRACTOR SHALL BE RESPONSIBLE FOR DEWATERING UTILITY TRENCHES AND EXCAVATIONS AND FOR THE MAINTENANCE OF SURFACE DRAINAGE DURING THE COURSE OF THE WORK.
11. CONTRACTOR SHALL COORDINATE AND NOTIFY CITY OF NEWBURGH WATER DEPARTMENT BEFORE STARTING ANY WATER MAIN AND HYDRANT WORK.

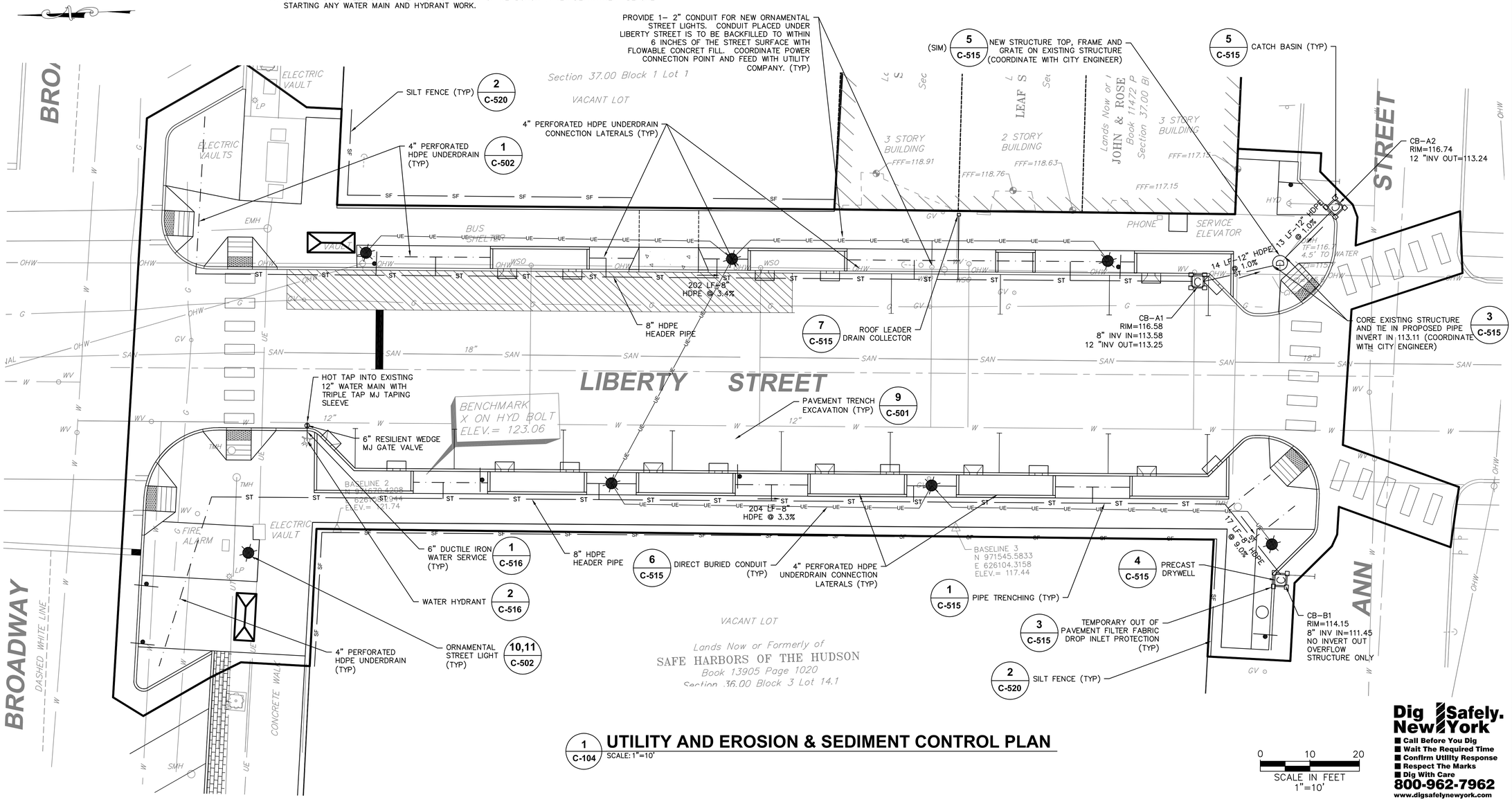

1 C-104 UTILITY AND EROSION & SEDIMENT CONTROL PLAN

SCALE: 1"=10'

0 10 20
SCALE IN FEET
1"=10'

Dig Safely. New York
- Call Before You Dig
- Wait The Required Time
- Confirm Utility Response
- Respect The Marks
- Dig With Care

800-962-7962
www.digsafelynewyork.com

CITY OF NEWBURGH
83 BROADWAY
NEWBURGH, NY 12550
TEL: (845) 569-7300

THE ALTERATION OF THIS MATERIAL IN ANY WAY, UNLESS UNDER THE DIRECTION OF A PROFESSIONAL ENGINEER, IS A VIOLATION OF SECTION 7209, SUBDIVISION 2, OF THE NEW YORK STATE LAW AND IS A CLASS "A" MISDEMEANOR.

CONTRACT PHASE:
CONSTRUCTION DOCUMENTS

DATE:
JULY 13, 2016

ADDENDA/REVISIONS

NO.	NAME	DATE

THIS DRAWING REFLECTS ALL CHANGES PREVIOUSLY MADE ON THIS SHEET. VERIFY THAT PREVIOUS CHANGES HAVE BEEN INCORPORATED INTO THE CONTRACT BEFORE PROCEEDING WITH ANY WORK NOT SPECIFICALLY REFERENCED BY THIS REVISION.

PROJECT NUMBER:
DESIGNED BY:
DRAWN BY:
CHECKED BY:

PROJECT TITLE:
LIBERTY STREET CDBG SIDEWALKS

LOCATION:
LIBERTY STREET
CITY OF NEWBURGH
ORANGE COUNTY, NEW YORK

OWNER:
CITY OF NEWBURGH

SHEET TITLE:
UTILITY AND E&SC PLAN

DRAWING NUMBER:
C-104

SHEET 6 OF 15

Jul 13,2016 – 5:16pm
E:\2015\2015048.01 Newburgh Liberty St\CADD\Newburgh City Standards\2015048.01 C-104 Utilities and E&SC Plan.dwg
36x24 PLOT SHEET

LEGEND:

- DISTURBANCE LIMITS
- PROPOSED TREE
- CA / 20 — PLANT NAME / PLANT QUANTITY
- PROPOSED ASPHALT PAVEMENT
- PROPOSED STAMPED CONCRETE SIDEWALK
- PROPOSED BROOM FINISHED CONCRETE SIDEWALK
- PROPOSED POROUS ASPHALT SIDEWALK
- PROPOSED SIGN LOCATION

PLANT LIST

	DETAIL	ABRV	BOTANICAL NAME	COMMON NAME	QTY	SIZE	COND	SPACING	COMMENT
TREES	1 / C-510	AR	Acer freemanii 'Autumn Blaze"	Autumn Blaze Red Maple	7	3" CAL	B&B	AS SHOWN	SHADE TREE
		AF	Amelanchier x 'Autumn Brilliance'	Autumn Brilliance Shadblow	4	2–2.5" CAL	B&B	AS SHOWN	ORNAMENTAL TREE FORM

GENERAL NOTES:

1. SEE SHEET C–510 FOR LANDSCAPING NOTES AND DETAILS.
2. ALL EXISTING SIGNS SHALL BE RESET ON NEW POSTS.

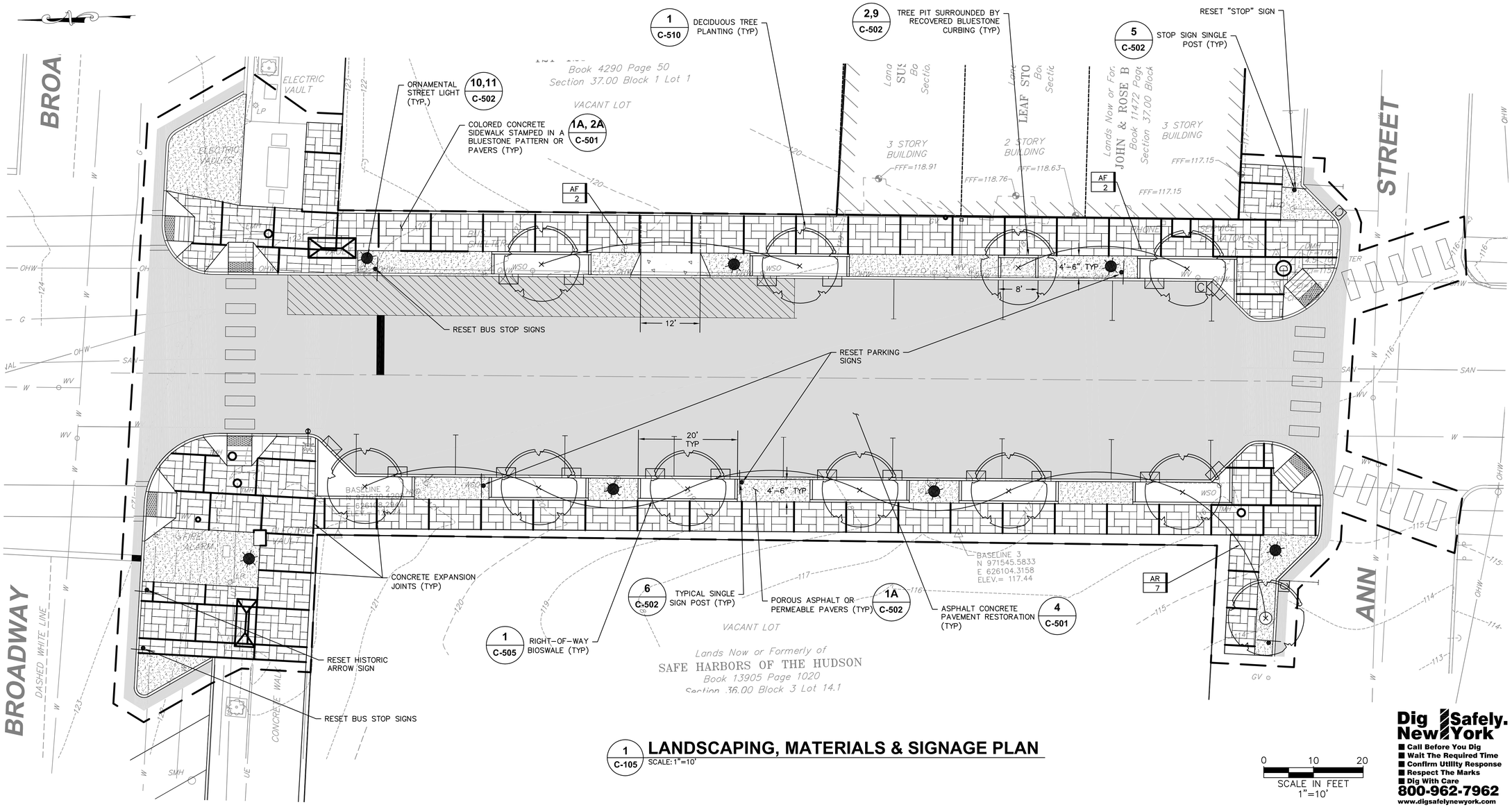

1 / C-105 LANDSCAPING, MATERIALS & SIGNAGE PLAN

SCALE: 1"=10'

0 10 20
SCALE IN FEET
1"=10'

Dig Safely. New York
- Call Before You Dig
- Wait The Required Time
- Confirm Utility Response
- Respect The Marks
- Dig With Care

800-962-7962
www.digsafelynewyork.com

CITY OF NEWBURGH
83 BROADWAY
NEWBURGH, NY 12550
TEL: (845) 569-7300

THE ALTERATION OF THIS MATERIAL IN ANY WAY, UNLESS UNDER THE DIRECTION OF A PROFESSIONAL ENGINEER, IS A VIOLATION OF SECTION 7209, SUBDIVISION 2, OF THE NEW YORK STATE LAW AND IS A CLASS "A" MISDEMEANOR.

CONTRACT PHASE:
CONSTRUCTION DOCUMENTS

DATE:
JULY 13, 2016

ADDENDA/REVISIONS

NO.	NAME	DATE

THIS DRAWING REFLECTS ALL CHANGES PREVIOUSLY MADE ON THIS SHEET. VERIFY THAT PREVIOUS CHANGES HAVE BEEN INCORPORATED INTO THE CONTRACT BEFORE PROCEEDING WITH ANY WORK NOT SPECIFICALLY REFERENCED BY THIS REVISION.

PROJECT NUMBER:
DESIGNED BY:
DRAWN BY:
CHECKED BY:

PROJECT TITLE:
LIBERTY STREET CDBG SIDEWALKS

LOCATION:
LIBERTY STREET
CITY OF NEWBURGH
ORANGE COUNTY, NEW YORK

OWNER:
CITY OF NEWBURGH

SHEET TITLE:
LANDSCAPING, MATERIALS & SIGNAGE PLAN

DRAWING NUMBER:
C-105

SHEET 7 OF 15

Jul 13,2016 – 5:17pm
E:\2015\2015048.01 Newburgh Liberty St\CADD\Newburgh City Standards\2015048.01 C-105 Landscaping and Materials Plan.dwg
36x24 PLOT SHEET

NOTE:
SEE PLAN FOR SPACING OF CONTROL JOINTS IN CONCRETE CURB SECTION

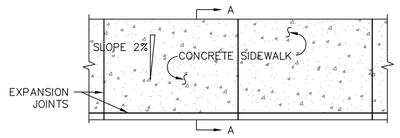

PLAN

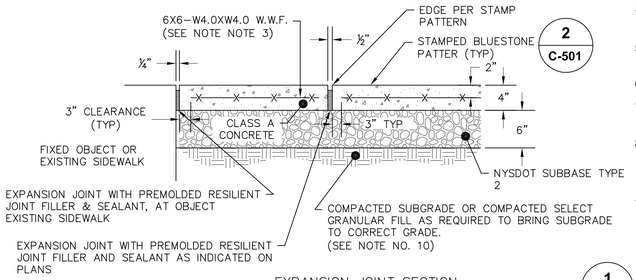

EXPANSION JOINT SECTION

SIDEWALK NOTES:

1. MATERIAL AND METHODS OF CONSTRUCTION SHALL BE IN CONFORMANCE WITH THE NEW YORK STATE DEPARTMENT OF TRANSPORTATION (NYSDOT) STANDARD SPECIFICATIONS FOR CONSTRUCTION AND MATERIALS, DATED JANUARY 1, 2016 AND AS AMENDED THEREAFTER; THE ONLY EXCEPTION BEING THAT THE WORK OF THIS CONTRACT SHALL BE MEASURED IN ENGLISH UNITS.
2. ALL CONCRETE SHALL BE 4000 PSI CLASS A CONCRETE. CONCRETE MATERIALS, PLACEMENT, AND CONSTRUCTION SHALL CONFORM WITH SECTION 500 OF THE ABOVE REFERENCED NYSDOT STANDARD SPECIFICATIONS.
3. REINFORCING STEEL FOR CONCRETE SHALL CONFORM WITH SECTION 556 – REINFORCING STEEL FOR CONCRETE STRUCTURES OF THE ABOVE REFERENCED NYSDOT STANDARD SPECIFICATIONS AND AS SPECIFICALLY CALLED OUT IN THE DRAWINGS.
4. CONCRETE TEXTURE AND STAMP PATTERN SHALL BE 18" X 36" BLUESTONE BY BUTTERFIELD COLOR (PRODUCT NUM. BST4210) OR APPROVED EQUIVALENT.
5. EXPANSION JOINTS SHALL BE LOCATED A MAXIMUM OF 20'–0" ON CENTER, OR AS INDICATED ON PLANS.
6. JOINTS SHALL NOT BE SAW CUT.
7. SUBBASE MATERIAL SHALL CONFORM WITH SECTION 304 OF THE ABOVE REFERENCED NYSDOT STANDARD.
8. WHERE IT IS NECESSARY TO PLACE FILL FOR PURPOSE OF BRINGING THE SUBGRADE ELEVATION UP TO A SPECIFIED GRADE, THE FILL MATERIAL PLACED SHALL BE IN CONFORMATION WITH SECTION 203–EXCAVATION AND EMBANKMENT OF THE ABOVE REFERENCED NYSDOT STANDARD SPECIFICATIONS.
10. ALL WORK SHALL CONFORM WITH SECTION 608–SIDEWALK, DRIVEWAYS, AND BICYCLE PATHS OF THE ABOVE REFERENCED NYSDOT STANDARD SPECIFICATIONS.

1 C-501 CONCRETE SIDEWALK DETAIL

SCALE: NOT TO SCALE

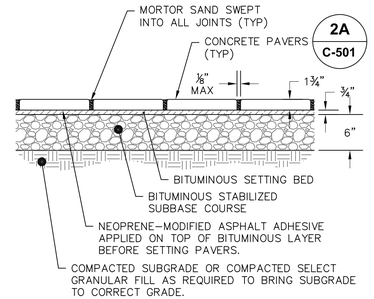

TYPICAL SECTION

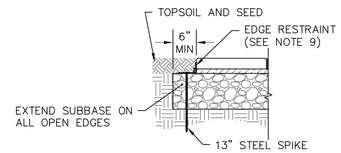

OPEN EDGE RESTRAINT

CONCRETE PAVER NOTES:

1. MATERIAL AND METHODS OF CONSTRUCTION SHALL BE IN CONFORMANCE WITH THE NEW YORK STATE DEPARTMENT OF TRANSPORTATION (NYSDOT) STANDARD SPECIFICATIONS FOR CONSTRUCTION AND MATERIALS, DATED JANUARY 1, 2016 AND AS AMENDED THEREAFTER; THE ONLY EXCEPTION BEING THAT THE WORK OF THIS CONTRACT SHALL BE MEASURED IN ENGLISH UNITS.
2. ALL WORK SHALL CONFORM WITH SECTION 608–SIDEWALK, DRIVEWAYS, AND BICYCLE PATHS OF THE ABOVE REFERENCED NYSDOT STANDARD SPECIFICATIONS.
3. CONCRETE PAVERS SHALL BE SLATEFACE PREST PAVERS BY HANOVER ARCHITECTURAL PRODUCTS COLORED BLUESTONE (PRODUCT NUM. M2374) OR APPROVED EQUIVALENT.
4. MORTOR SAND SHALL BE INSTALLED PER SECTION 608–3.03 OF THE ABOVE REFERENCED NYSDOT STANDARD.
5. NEOPRENE–MODIFIED ASPHALT ADHESIVE SHALL CONFORM TO SECTION 608–2.03A OF THE ABOVE REFERENCED NYSDOT STANDARD.
6. BITUMINOUS SETTING BED SHALL CONFORM TO SECTION 608–3.03C OF THE ABOVE REFERENCED NYSDOT STANDARD.
7. BITUMINOUS STABILIZED SUBBASE MATERIAL SHALL CONFORM WITH SECTION 302 OPTION A OF THE ABOVE REFERENCED NYSDOT STANDARD.
8. WHERE IT IS NECESSARY TO PLACE FILL FOR PURPOSE OF BRINGING THE SUBGRADE ELEVATION UP TO A SPECIFIED GRADE, THE FILL MATERIAL PLACED SHALL BE IN CONFORMATION WITH SECTION 203–EXCAVATION AND EMBANKMENT OF THE ABOVE REFERENCED NYSDOT STANDARD SPECIFICATIONS.
9. PAVER EDGE RESTRAINT SHALL BE USED ON ALL EDGES THAT ABUT TURF. EDGE RESTRAINT SHALL BE HANOVER EDGE 100 OR APPROVED EQUAL AND INSTALLED PER MANUFACTURERS SPECIFICATIONS.

1A C-501 CONCRETE PAVER SIDEWALK DETAIL

SCALE: NOT TO SCALE

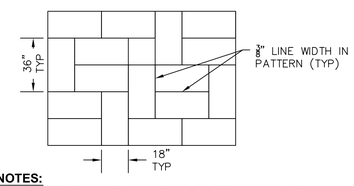

NOTES:
1. CONCRETE TEXTURE AND STAMP PATTERN SHALL BE 18" X 36" BLUESTONE BY BUTTERFIELD COLOR (PRODUCT NUM. BST4210) OR APPROVED EQUIVALENT.
2. PATTERN SHOWN IS AN EXAMPLE. PROPOSED PATTERN SHALL BE SUBMITTED DURING SHOP DRAWING REVIEW FOR APPROVAL.

2 C-501 STAMPED BLUESTONE CONCRETE PATTERN

SCALE: NOT TO SCALE

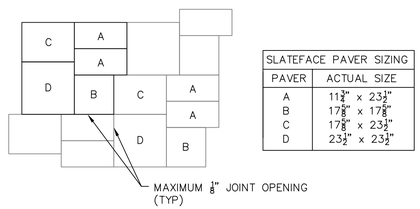

SLATEFACE PAVER SIZING	
PAVER	ACTUAL SIZE
A	11¾" x 23¼"
B	17⅞" x 17⅞"
C	17⅞" x 23¼"
D	23½" x 23½"

NOTES:
1. CONCRETE PAVERS SHALL BE SLATEFACE PREST PAVERS BY HANOVER ARCHITECTURAL PRODUCTS COLORED BLUESTONE (PRODUCT NUM. M2374) OR APPROVED EQUIVALENT.
2. PATTERN SHOWN IS HANOVER LAYING PATTERN DESIGN A. PROPOSED PATTERN SHALL TO BE SUBMITTED DURING SHOP DRAWING REVIEW FOR APPROVAL.

2A C-501 SIDEWALK ALTERNATE CONCRETE PAVERS

SCALE: NOT TO SCALE

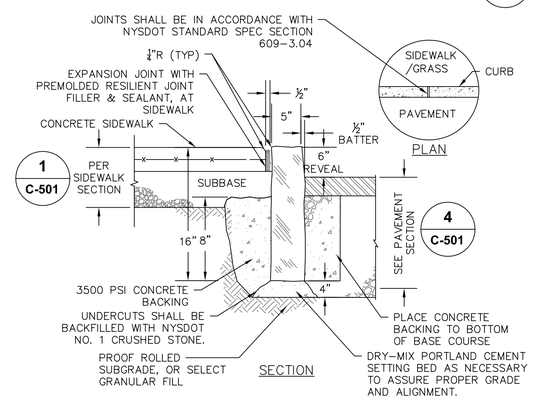

PLAN

SECTION

NOTES:
1. GRANITE CURB TO BE INSTALLED IN ACCORDANCE WITH NYSDOT STANDARD SPECIFICATION SECTION 609.
2. FOR NEW CONSTRUCTION, A 6" CURB REVEAL SHALL BE MAINTAINED FOR CURB REPLACEMENT OR RESETTING, MATCH EXISTING REVEAL.

3 C-501 GRANITE CURB @ SIDEWALK

SCALE: NOT TO SCALE

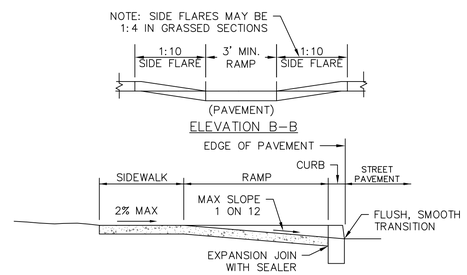

ELEVATION B–B

SECTION A–A

PLAN

NOTES:
1. ALL WORK SHALL CONFORM WITH THE NYSDOT STANDARD SPECIFICATION FOR CONSTRUCTION AND MATERIALS DATED, MAY 4, 2006 AND ALL ADDENDA THERETO; SPECIFICALLY SECTION 608– SIDEWALKS, DRIVEWAYS, AND BICYCLE PATHS.
2. SLOPE RAMP AND SIDE FLARES AS INDICATED IN THE PLANS OR AS ORDERED BY THE ENGINEER.
3. TACTILE WARNING STRIPS SHALL BE PROVIDED ON ALL RAMPS IN ACCORDANCE W/ ADA REQUIREMENTS.

7 C-501 ADA RAMP WITH FLARED SIDE SLOPES

SCALE: NOT TO SCALE

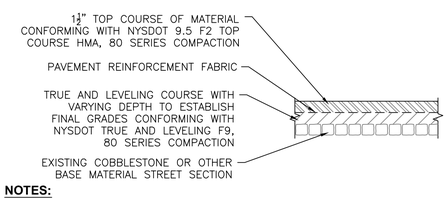

NOTES:

1. MATERIALS AND METHODS OF CONSTRUCTION SHALL BE IN CONFORMANCE WITH THE NEW YORK STATE DEPARTMENT OF TRANSPORTATION (NYSDOT) STANDARD SPECIFICATIONS FOR CONSTRUCTION AND MATERIALS, DATED JANUARY 1, 2016, AND ALL ADDENDA THERETO; THE ONLY EXCEPTION BEING THAT THE WORK OF THIS CONTRACT SHALL BE MEASURED IN ENGLISH UNITS.
2. HOT MIX ASPHALT (HMA) PAVEMENT SHALL CONFORM WITH SECTION 400–HOT MIX ASPHALT OF THE ABOVE REFERENCED NYSDOT STANDARD SPECIFICATIONS AND THE TYPE CALLED OUT IN THESE DRAWINGS. ALTHOUGH SECTION 400 IN ITS ENTIRETY IS REFERENCED, THE HOT MIX ASPHALT (HMA) PAVEMENT(S) SPECIFIED FOR THIS CONTRACT SHALL BE AS SPECIFIED UNDER SECTION 402–HOT MIX ASPHALT (HMA) PAVEMENTS.
3. TACK COAT MATERIAL AND APPLICATION RATE WHEN SPECIFIED OR CALLED OUT IN THESE DRAWINGS OR REQUIRED BY THE REFERENCED SPECIFICATIONS SHALL CONFORM WITH SECTION 407–TACK COAT OF THE ABOVE REFERENCED NYSDOT STANDARD SPECIFICATIONS.
4. PAVEMENT REINFORCEMENT FABRIC SHALL BY TENSAR GLASGRID 8501 OR APPROVED EQUIVALENT. PRODUCT SHALL BE INSTALLED PER MANUFACTURES SPECIFICATIONS.

4 C-501 TYPICAL CITY OF NEWBURGH, NY ASPHALT PAVEMENT RESTORATION

SCALE: NOT TO SCALE

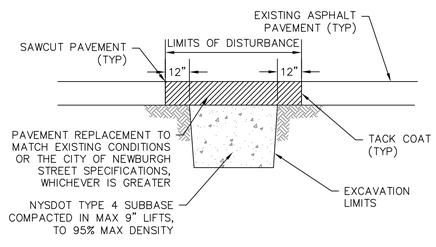

NOTES:

1. ALL ASPHALT CONCRETE WORK COMPLETED IN CITY OF NEWBURGH, NY STREETS SHALL CONFORM TO CITY PAVEMENT SECTION STANDARDS.
2. IF EXISTING PAVEMENT THICKNESS EXCEEDS 6", INCREASE THICKNESS OF BINDER COURSE TO MATCH EXISTING TOTAL THICKNESS.
3. PATCHES ONE FOOT OR LESS FROM THE CURB SHALL BE EXTENDED TO THE FACE OF CURB.
4. ALL PAVEMENT MARKINGS DISTURBED SHALL BE RESTORED TO THE SATISFACTION OF THE CITY.
5. ALL JOINTS TO BE SEALED WITH ASPHALT EMULSION (AS–20).

5 C-501 CITY OF NEWBURGH, NY TYPICAL TRENCH EXCAVATION

SCALE: NOT TO SCALE

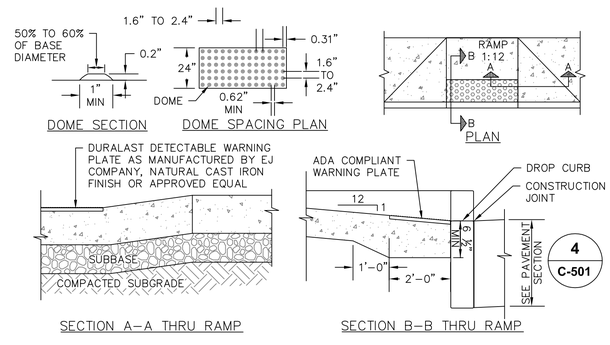

NOTES:
1. TACTILE WARNING STRIP SHALL BE ADA COMPLIANT INCLUDING VISUALLY CONTRASTING WITH ADJOINING SURFACES.

6 C-501 TACTILE WARNING FOR RAMPS

SCALE: NOT TO SCALE

CITY OF NEWBURGH
83 BROADWAY
NEWBURGH, NY 12550
TEL: (845) 569-7300

THE ALTERATION OF THIS MATERIAL IN ANY WAY, UNLESS UNDER THE DIRECTION OF A PROFESSIONAL ENGINEER, IS A VIOLATION OF SECTION 7209, SUBDIVISION 2, OF THE NEW YORK STATE LAW AND IS A CLASS "A" MISDEMEANOR.

CONTRACT PHASE:
CONSTRUCTION DOCUMENTS

DATE:
JULY 13, 2016

ADDENDA/REVISIONS

NO.	NAME	DATE

THIS DRAWING REFLECTS ALL CHANGES PREVIOUSLY MADE ON THIS SHEET. VERIFY THAT PREVIOUS CHANGES HAVE BEEN INCORPORATED INTO THE CONTRACT BEFORE PROCEEDING WITH ANY WORK NOT SPECIFICALLY REFERENCED BY THIS REVISION.

PROJECT NUMBER:
DESIGNED BY:
DRAWN BY:
CHECKED BY:

PROJECT TITLE:
LIBERTY STREET CDBG SIDEWALKS

LOCATION:
LIBERTY STREET
CITY OF NEWBURGH
ORANGE COUNTY, NEW YORK

OWNER:
CITY OF NEWBURGH

SHEET TITLE:
SITE DETAILS

DRAWING NUMBER:
C-501

SHEET 8 OF 15

Jul 13,2016 – 5:18pm
E:\2015\2015048.01 Newburgh Liberty St\CADD\Newburgh City Standards\2015048.01 C-501 Site Details.dwg
36x24 PLOT SHEET

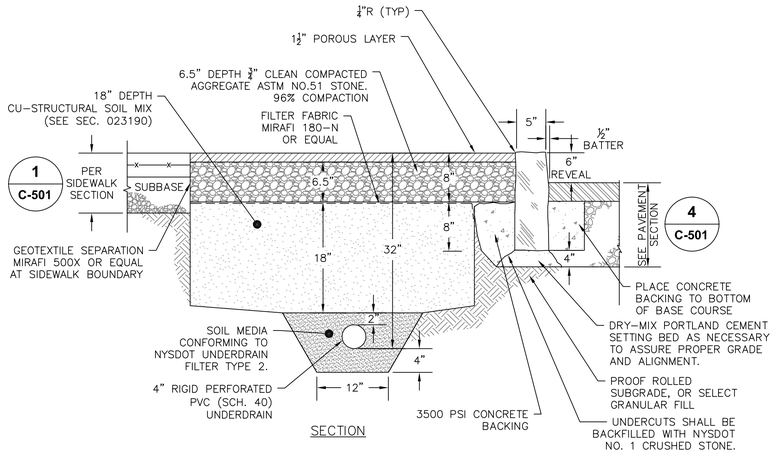

NOTES:

1. POROUS PAVEMENT SHALL BE FLEXI-PAVE BY K.B.INDUSTRIES, INC. REDWOOD COLORED OR APPROVED EQUIVALENT.
2. STRUCTURAL SOIL MIX SHALL CONFORM TO CU-STRUCTURAL SOIL BY CORNELL UNIVERSITY OR APPROVED EQUIVALENT.

1 C-502 POROUS FLEXIBLE PAVEMENT

SCALE: NOT TO SCALE

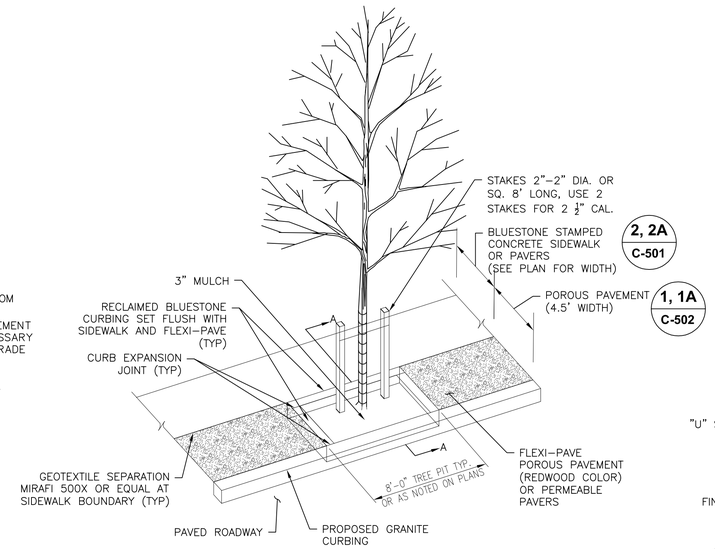

2 C-502 TYPICAL TREE PIT

SCALE: NOT TO SCALE

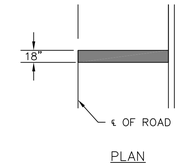

3 C-502 STOP BAR

SCALE: NOT TO SCALE

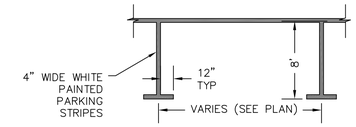

4 C-502 ROADWAY PAVEMENT STRIPING STALLS

SCALE: NOT TO SCALE

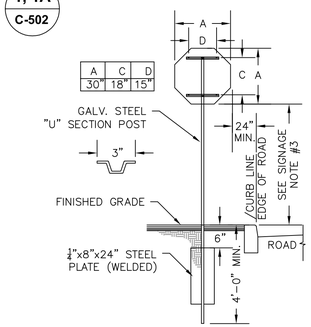

5 C-502 SINGLE POST STOP SIGN MOUNTING DETAIL

SCALE: NOT TO SCALE

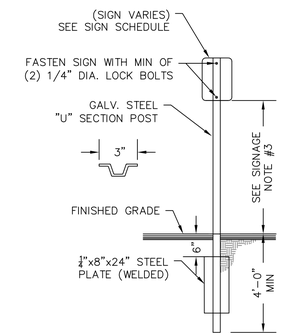

6 C-502 SINGLE POST SIGN MOUNTING DETAIL

SCALE: NOT TO SCALE

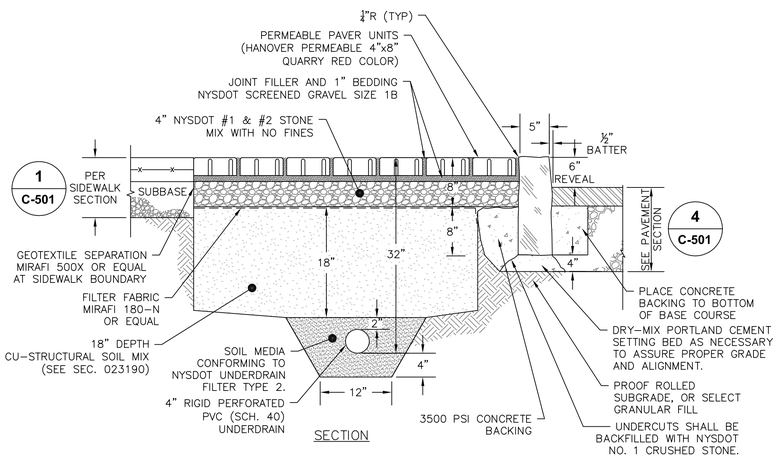

NOTES:

1. PERMEABLE PAVERS SHALL BE HANOVER PERMEABLE 4"x8" (NOMINAL SIZE), QUARRY RED COLORED LAID IN A RUNNING BOND PATTERN OR APPROVED EQUIVALENT.
2. STRUCTURAL SOIL MIX SHALL CONFORM TO CU-STRUCTURAL SOIL BY CORNELL UNIVERSITY OR APPROVED EQUIVALENT.

1A C-502 PERMEABLE PAVERS

SCALE: NOT TO SCALE

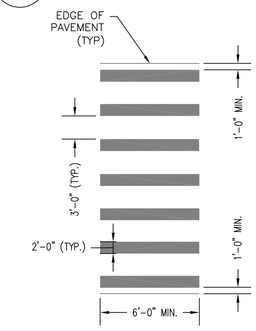

7 C-502 CROSSWALK CONTINENTAL PAVEMENT MARKING

SCALE: NOT TO SCALE

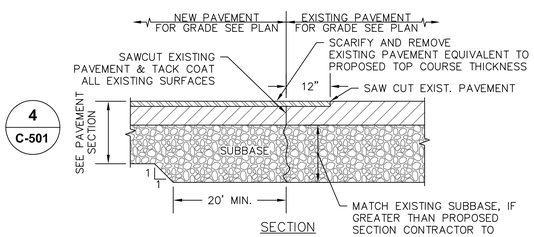

8 C-502 PAVEMENT TRANSITION

SCALE: NOT TO SCALE

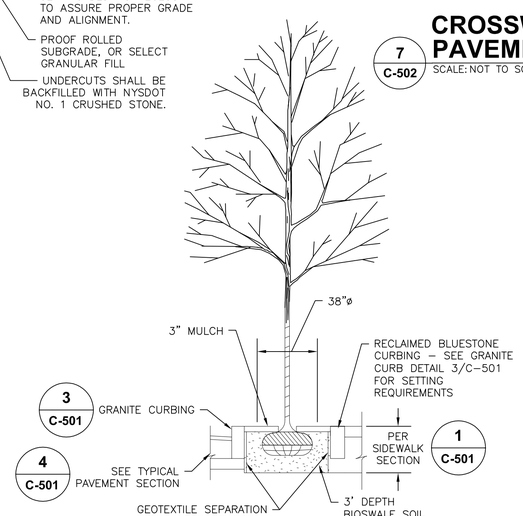

9 C-502 TREE PIT SECTION A-A

SCALE: NOT TO SCALE

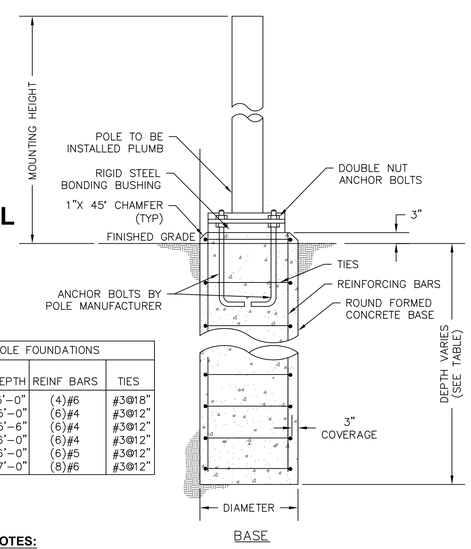

LIGHT POLE FOUNDATIONS				
POLE HEIGHT	DIAM.	DEPTH	REINF BARS	TIES
<15'	18"	5'-0"	(4)#6	#3@18"
25'	24"	5'-0"	(6)#4	#3@12"
30'	24"	5'-6"	(6)#4	#3@12"
35'	24"	6'-0"	(6)#4	#3@12"
40'	24"	6'-0"	(6)#5	#3@12"
50'	24"	7'-0"	(8)#6	#3@12"

NOTES:

1. CONDUITS AND GROUNDING SHALL BE AS SPECIFIED BY MEP ENGINEER.
2. ALL CONCRETE SHALL BE 3,000 PSI @ 28 DAYS
3. DESIGNED FOR 90 MPH WIND WITH FIXTURE AREA OF 13 SF
4. FOUNDATION DIAMETER AND REINFORCING CIRCLE SHALL BE COORDINATED WITH ANCHOR BOLT LIMITS
5. FOUNDATIONS SHALL BEAR ON UNDISTURBED NATURAL SOIL OR COMPACTED CRUSH STONE
6. ALL EXCAVATIONS SHALL BE BACKFILLED WITH STRUCTURAL FILL AND COMPACTED TO 95% OF MAXIMUM MATERIAL DENSITY
7. EXPOSED AREAS OF CONCRETE AND ONE FOOT MIN BELOW FINISHED GRADE SHALL BE FORMED

10 C-502 EXTERIOR MOUNTED LIGHT WITH CONCRETE BASE

SCALE: NOT TO SCALE

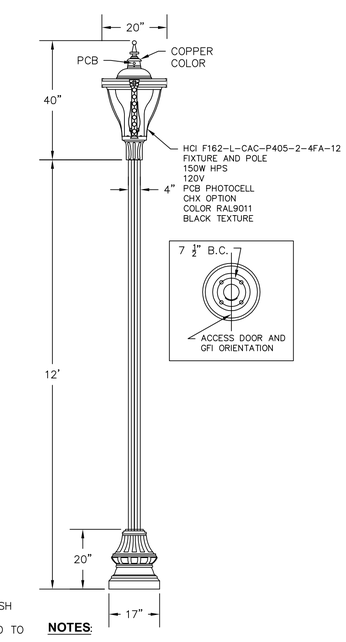

NOTES:

1. PROPOSED LIGHTS SHALL MEET CITY OF NEWBURG STANDARDS BY HERITAGE CASTING & IRONWORKS.

11 C-502 ORNAMENTAL STREET LIGHT

SCALE: NOT TO SCALE

CITY OF NEWBURGH
83 BROADWAY
NEWBURGH, NY 12550
TEL: (845) 569-7300

THE ALTERATION OF THIS MATERIAL IN ANY WAY, UNLESS UNDER THE DIRECTION OF A PROFESSIONAL ENGINEER, IS A VIOLATION OF SECTION 7209, SUBDIVISION 2, OF THE NEW YORK STATE LAW AND IS A CLASS "A" MISDEMEANOR.

CONTRACT PHASE:

CONSTRUCTION DOCUMENTS

DATE:

JULY 13, 2016

ADDENDA/REVISIONS

NO.	NAME	DATE

THIS DRAWING REFLECTS ALL CHANGES PREVIOUSLY MADE ON THIS SHEET. VERIFY THAT PREVIOUS CHANGES HAVE BEEN INCORPORATED INTO THE CONTRACT BEFORE PROCEEDING WITH ANY WORK NOT SPECIFICALLY REFERENCED BY THIS REVISION.

PROJECT NUMBER:

DESIGNED BY:

DRAWN BY:

CHECKED BY:

PROJECT TITLE:

LIBERTY STREET CDBG SIDEWALKS

LOCATION:

LIBERTY STREET
CITY OF NEWBURGH
ORANGE COUNTY, NEW YORK

OWNER:

CITY OF NEWBURGH

SHEET TITLE:

SITE DETAILS

DRAWING NUMBER:

C-502

Jul 13,2016 – 5:19pm
E:\2015\2015048.01 Newburgh Liberty St\CADD\Newburgh City Standards\2015048.01 C-502 Site Details.dwg
36x24 PLOT SHEET

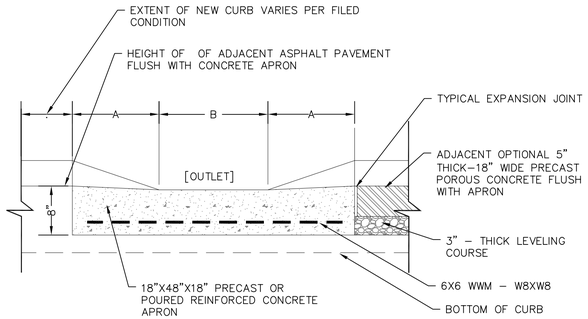

SECTION A–A

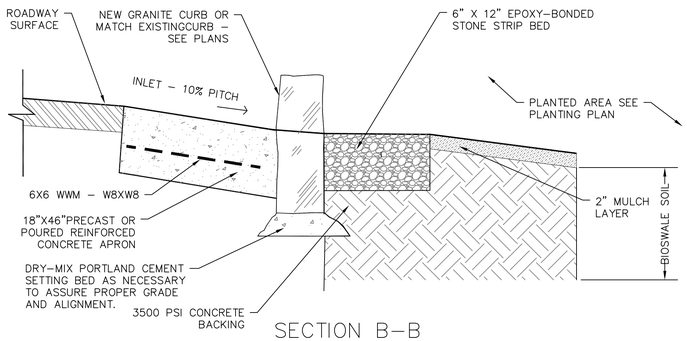

SECTION B–B

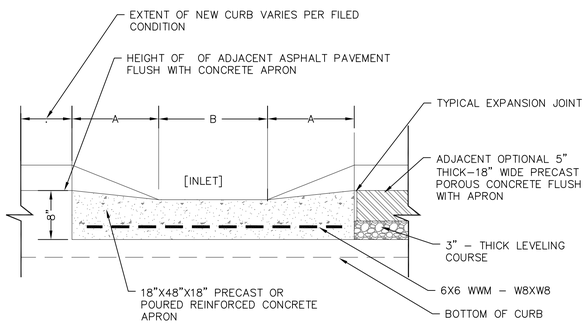

SECTION C–C

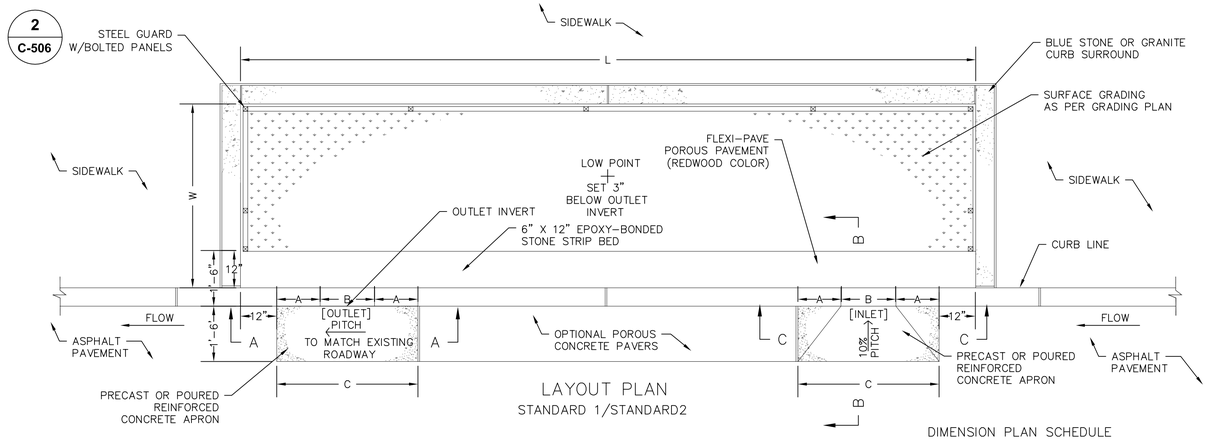

LAYOUT PLAN

STANDARD 1/STANDARD2

DIMENSION PLAN SCHEDULE

R.O.W BIOSWALE			INLET/OUTLET DIMENSIONS		
LENGTH (L) 1FT.INCREMENT	WIDTH (W) 6 IN.INCREMENT	STANDARD	A	B	C
17'≤L ≤20'	4–0" TO 6'–0"	STD. 1	14"	18"	3'–10"
13'≤L ≤16'	4–0" TO 6'–0"	STD. 2	10"	14"	2'–10"

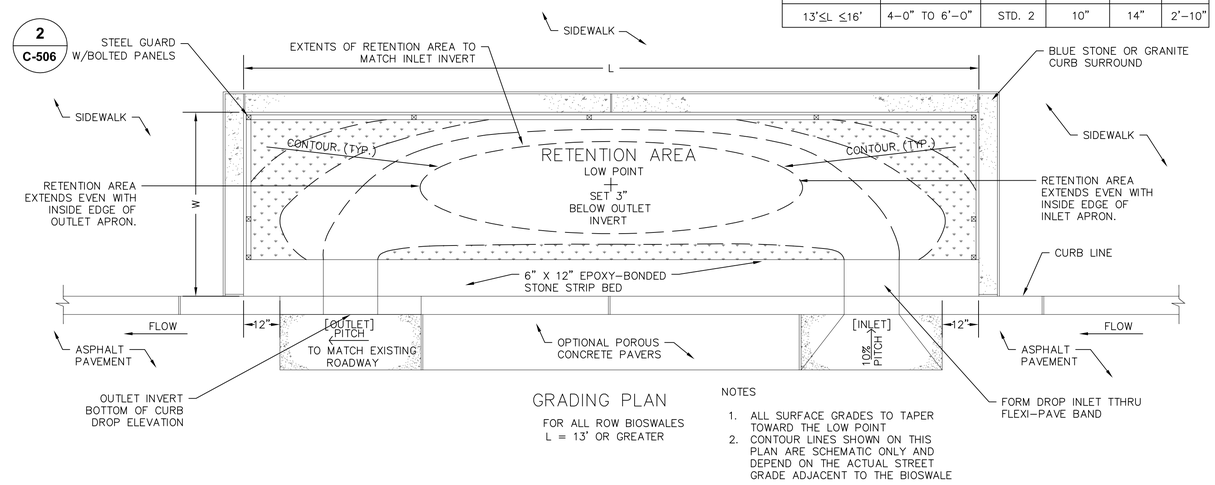

GRADING PLAN

FOR ALL ROW BIOSWALES
L = 13' OR GREATER

NOTES

1. ALL SURFACE GRADES TO TAPER TOWARD THE LOW POINT
2. CONTOUR LINES SHOWN ON THIS PLAN ARE SCHEMATIC ONLY AND DEPEND ON THE ACTUAL STREET GRADE ADJACENT TO THE BIOSWALE

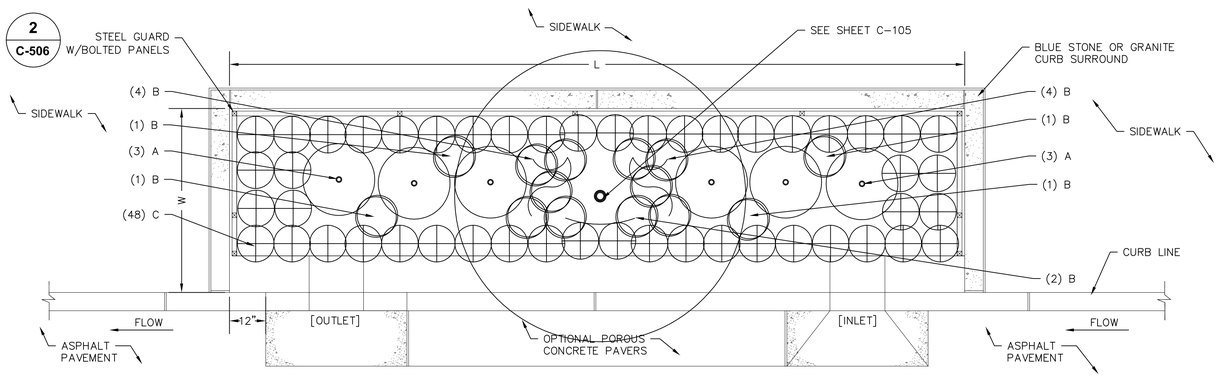

PLANTING PLAN

FOR ALL ROW BIOSWALES
L = 17' OR GREATER

PLANT SCHEDULE

QTY.	KEY	PLAN VERSION	TYPE	BOTANICAL NAME	COMMON NAME	SIZE	SPACING
6	A	A	SHRUB	ILEX GLABRA 'SHAMROCK'	INKBERRY	B&B	2' O.C.
		B	ROSE	ROSA PALUSTRIS	SWAMP ROSE	#2/#3CONT.	
12	B	A	PERENNIAL	HIBISCUS MOSCHEUTOS 'LUNA PINK'	HARDY HIBISCUS	#2 CONT.	12" O.C.
		B	PERENNIAL	RUDEKIA SUBTOMENTOSA'HENRY EILERS'	SWEET CONEFLOWER	#2 CONT.	
48	C	A	GRASSES	PENNISETUM ALOPECUROIDES'LITTLE BUNNY'	FOUNTAIN GRASS	#2 CONT.	12" O.C.
		B	GRASSES	CAREX "ICE DANCE"	SEDGE	#2 CONT.	

NOTES:

1. SEE SHEET C–506 FOR ADDITIONAL R.O.W. BIOSWALE DETAILS

1 / C-505 **R.O.W. BIOSWALE**

SCALE: NOT TO SCALE

CITY OF NEWBURGH
83 BROADWAY
NEWBURGH, NY 12550
TEL: (845) 569-7300

THE ALTERATION OF THIS MATERIAL IN ANY WAY, UNLESS UNDER THE DIRECTION OF A PROFESSIONAL ENGINEER, IS A VIOLATION OF SECTION 7209, SUBDIVISION 2, OF THE NEW YORK STATE LAW AND IS A CLASS "A" MISDEMEANOR.

CONTRACT PHASE:

CONSTRUCTION DOCUMENTS

DATE:

JULY 13, 2016

ADDENDA/REVISIONS

NO.	NAME	DATE

THIS DRAWING REFLECTS ALL CHANGES PREVIOUSLY MADE ON THIS SHEET. VERIFY THAT PREVIOUS CHANGES HAVE BEEN INCORPORATED INTO THE CONTRACT BEFORE PROCEEDING WITH ANY WORK NOT SPECIFICALLY REFERENCED BY THIS REVISION.

PROJECT NUMBER:

DESIGNED BY:

DRAWN BY:

CHECKED BY:

PROJECT TITLE:

LIBERTY STREET CDBG SIDEWALKS

LOCATION:

LIBERTY STREET
CITY OF NEWBURGH
ORANGE COUNTY, NEW YORK

OWNER:

CITY OF NEWBURGH

SHEET TITLE:

DRAWING NUMBER:

Jul 13,2016 – 5:19pm
E:\2015\2015048.01 Newburgh Liberty St\CADD\Newburgh City Standards\2015048.01 C-505 Bioswale Details.dwg
36x24 PLOT SHEET

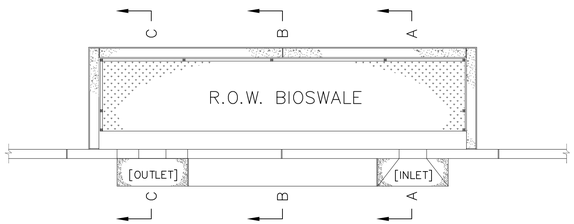

DEPTH SCHEDULE		
R.O.W BIOSWALE	A	B
@ TREE LOCATION	30"	24" MIN
REMAIN'G AREA	24"	18" MIN

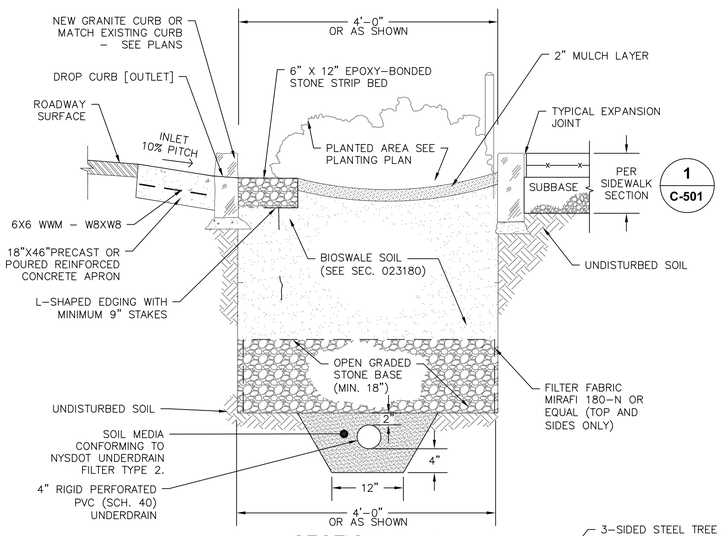

SECTION A–A
AT BIOSWALE INLET

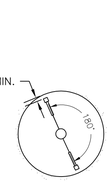

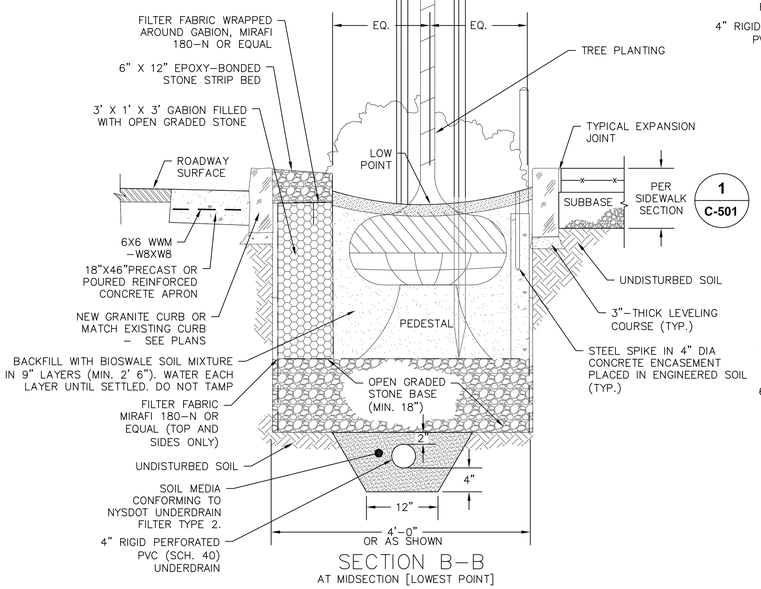

SECTION B–B
AT MIDSECTION [LOWEST POINT]

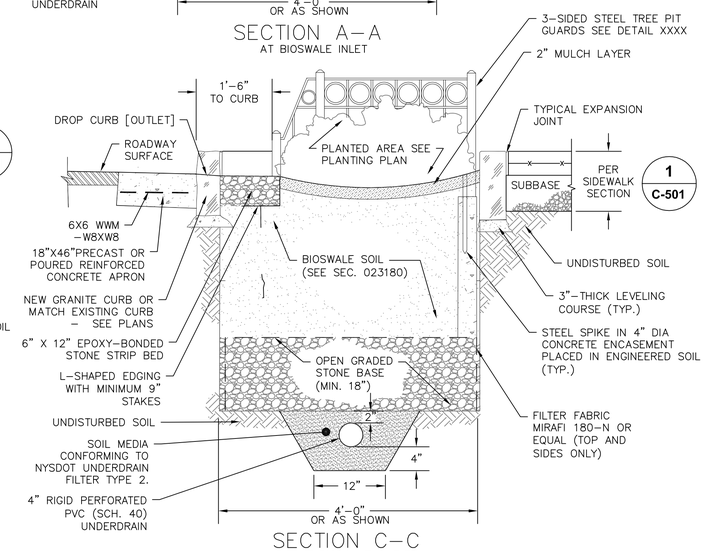

SECTION C–C
AT BIOSWALE OUTLET

1 C-506 R.O.W. BIOSWALE SECTIONS

SCALE: NOT TO SCALE

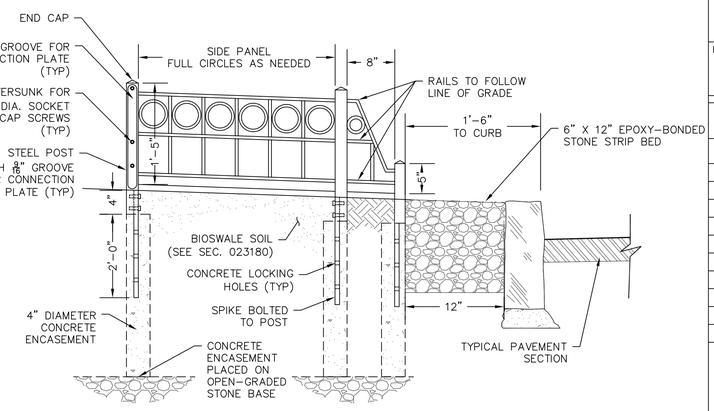

SIDE SECTION

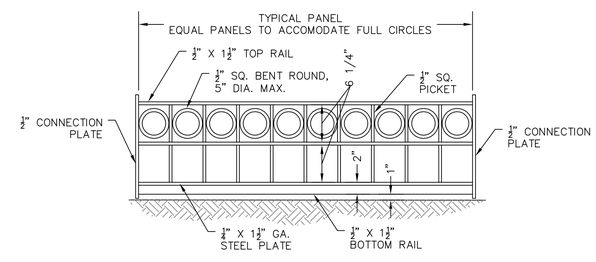

TYPICAL SECTION

NOTES:

1. ALL STEEL SHALL CONFORM TO ASTM–A36 SPECIFICATION.
2. ALL JOINTS TO BE WELDED UNLESS NOTED OTHERWISE.
3. ALL POST AND GROOVE CONNECTIONS TO BE BOLTED.
4. ALL VISIBLE BOLTS TO BE COUNTERSUNK AND FLUSHED WITH THE POSTS.
5. ALL STEEL TO BE PAINTED WITH ONE SHOP COAT OF PRIMER AND ONE SHOP COAT OF INTERMEDIATE AND ONE SHOP COAT (OR ROLLED FIELD COAT) OF FINISH TOP COAT. THE COLOR OF TOP COAT SHALL BE BLACK. ALL COMPONENTS OF PAINT SHALL BE COMPATIBLE AND SUPPLIED BY A SINGLE MANUFACTURER. ALL PAINT SHALL BE APPLIED IN COMPLIANCE WITH MANUFACTURER'S DATA SHEETS. PRIOR TO FIELD PAINTING, THE SURFACES TO BE PAINTED SHALL BE CLEAN, DRY AND LIGHTLY SANDPAPERED.
6. RAILS TO FOLLOW LINE OF GRADE.
7. ALL SPIKES OF TREE FENCING TO BE EMBEDDED IN CONCRETE PER DETAIL.

2 C-506 R.O.W. BIOSWALE FENCE

SCALE: NOT TO SCALE

CITY OF NEWBURGH
83 BROADWAY
NEWBURGH, NY 12550
TEL: (845) 569-7300

THE ALTERATION OF THIS MATERIAL IN ANY WAY, UNLESS UNDER THE DIRECTION OF A PROFESSIONAL ENGINEER, IS A VIOLATION OF SECTION 7209, SUBDIVISION 2, OF THE NEW YORK STATE LAW AND IS A CLASS "A" MISDEMEANOR.

CONTRACT PHASE:
CONSTRUCTION DOCUMENTS

DATE:
JULY 13, 2016

ADDENDA/REVISIONS

NO.	NAME	DATE

THIS DRAWING REFLECTS ALL CHANGES PREVIOUSLY MADE ON THIS SHEET. VERIFY THAT PREVIOUS CHANGES HAVE BEEN INCORPORATED INTO THE CONTRACT BEFORE PROCEEDING WITH ANY WORK NOT SPECIFICALLY REFERENCED BY THIS REVISION.

PROJECT NUMBER:
DESIGNED BY:
DRAWN BY:
CHECKED BY:

PROJECT TITLE:
LIBERTY STREET CDBG SIDEWALKS

LOCATION:
LIBERTY STREET
CITY OF NEWBURGH
ORANGE COUNTY, NEW YORK

OWNER:
CITY OF NEWBURGH

SHEET TITLE:
BIOSWALE DETAILS

DRAWING NUMBER:
C-506

SHEET 11 OF 15

Jul 13,2016 – 5:19pm
E:\2015\2015048.01 Newburgh Liberty St\CADD\Newburgh City Standards\2015048.01 C-506 Bioswale Details.dwg
36x24 PLOT SHEET

VEGETATIVE COVER SPECIFICATIONS:

PERMANENT VEGETATIVE COVER (AFTER CONSTRUCTION):

1. SITE PREPARATION
   A. BRING AREA TO BE SEEDED TO REQUIRED GRADE. A MINIMUM OF 4" OF TOPSOIL IS REQUIRED.
   B. PREPARE SEEDBED BY LOOSENING SOIL TO A DEPTH OF 4 INCHES.
   C. REMOVE ALL STONES OVER 1 INCH IN DIAMETER, STICKS AND FOREIGN MATTER FROM THE SURFACE.
   D. LIME TO PH OF 6.5.
   E. FERTILIZER: USE 5-10-5 (NPK) OR EQUIVALENT. APPLY AT RATE OF 4 LBS/1000 SF.
   F. INCORPORATE LIME AND FERTILIZER IN THE TOP 4 INCHES OF TOPSOIL.
   G. SMOOTH AND FIRM THE SEEDBED.

2. SEED MIXTURE FOR USE ON LAWN AREAS:
   PROVIDE FRESH, CLEAN, NEW-CROP SEED MIXED IN THE PROPORTIONS SPECIFIED FOR SPECIES AND VARIETY, AND CONFORMING TO FEDERAL AND STATE STANDARDS.

   LAWN SEED MIX: (APPLY AT RATE OF 5 TO 6 LBS PER 1000 SF)

AMOUNT BY: WEIGHT	SPECIES OR VARIETY	MINIMUM % PURITY	GERMINATION
40%	KENTUCKY BLUE GRASS	95%	60%
35%	PERENNIAL RYE	98%	90%
25%	RED FESCUE	97%	85%
100%			

3. SEEDING
   A. APPLY SEED UNIFORMLY BY CYCLONE SEEDER CULTI-PACKER OR HYDRO-SEEDER AT RATE INDICATED.
   B. ALL SEEDED AREAS SHALL BE PROTECTED FROM EROSION BY ONE OF THE FOLLOWING METHODS:
      i. A UNIFORM BLANKET OF STRAW APPLIED AT A RATE OF 2 TONS /ACRE MIN., TO BE APPLIED ONCE SEEDING IS COMPLETE.
      ii. WOOD FIBER CELLULOSE APPLIED WITH SEED MIX BY HYDROSEEDER AT RATE OF 2,000 LBS/ACRE.
   C. ALL SEEDED SLOPES 3:1 OR GREATER SHALL BE PROTECTED FROM EROSION WITH JUTE MESH OR APPROVED EQUAL.
   D. IRRIGATE TO FULLY SATURATE SOIL LAYER, BUT NOT TO DISLODGE PLANTING SOIL.
   E. UNLESS OTHERWISE DIRECTED IN WRITING, SEED FROM MARCH 15TH TO JUNE 15TH, AND FROM AUGUST 15TH TO OCTOBER 15TH.

TOPSOIL SPECIFICATIONS:

1. EXISTING EXCESS TOPSOIL SHALL BE REMOVED AND STORED IN TOPSOIL STOCKPILES SUFFICIENTLY REMOVED FROM OTHER EXCAVATION OR DISTURBANCE TO AVOID MIXING. SILT FENCE SHALL BE INSTALLED AROUND TOPSOIL STOCKPILE AREAS.

SITE PREPARATION:

1. COMPLETE ROUGH GRADING AND FINAL GRADE, ALLOWING FOR DEPTH OF TOPSOIL TO BE ADDED.

2. SCARIFY ALL COMPACT, SLOWLY PERMEABLE, MEDIUM AND FINE TEXTURED SUBSOIL AREAS. SCARIFY AT APPROXIMATELY RIGHT ANGLES TO THE SLOPE DIRECTION IN SOIL AREAS THAT ARE STEEPER THAN 5%.

3. REMOVE REFUSE, WOODY PLANT PARTS, STONES OVER 3 INCHES IN DIAMETER, AND OTHER LITTER.

TOPSOIL MATERIALS:

1. NEW TOPSOIL SHALL BE BETTER THAN OR EQUAL TO THE QUALITY OF THE EXISTING ADJACENT TOPSOIL. IT SHALL MEET THE FOLLOWING CRITERIA:

   A. ORIGINAL LOAM TOPSOIL, WELL DRAINED HOMOGENEOUS TEXTURE AND OF UNIFORM GRADE, WITHOUT THE ADMIXTURE OF SUBSOIL MATERIAL AND FREE OF DENSE MATERIAL, HARDPAN, CLAY, STONES, SOD OR OTHER OBJECTIONABLE MATERIAL.
   B. CONTAINING NOT LESS THAN 5% NOR MORE THAN 20% ORGANIC MATTER IN THAT PORTION OF A SAMPLING PASSING A 1/4" SIEVE WHEN DETERMINED BY THE WET COMBUSTION METHOD ON A SAMPLE DRIED AT 105°C.
   C. CONTAINING A PH VALUE WITHIN THE RANGE OF 6.5 TO 7.5 ON THAT PORTION OF THE SAMPLE WHICH PASSES A 1/4" SIEVE.
   D. CONTAINING THE FOLLOWING WASHED GRADATIONS:

SIEVE DESIGNATION	% PASSING
1"	100
1/4"	97-100
NO 200	20-60

APPLICATION AND GRADING:

1. TOPSOIL SHALL BE DISTRIBUTED TO A UNIFORM DEPTH OF 4" OVER THE AREA. IT SHALL NOT BE PLACED WHEN IT IS PARTLY FROZEN, MUDDY, OR ON FROZEN SLOPES OR OVER ICE, SNOW, OR STANDING WATER.

2. TOPSOIL PLACED AND GRADED ON SLOPES STEEPER THAN 5% SHALL BE PROMPTLY FERTILIZED, SEEDED, MULCHED AND STABILIZED BY "TRACKING" WITH SUITABLE EQUIPMENT.

GENERAL LANDSCAPING NOTES:

1. THE LANDSCAPE CONTRACTOR SHALL CAREFULLY COORDINATE CONSTRUCTION ACTIVITIES WITH THAT OF THE EARTHWORK CONTRACTOR AND OTHER SITE DEVELOPMENT.

2. THE CONTRACTOR SHALL VERIFY DRAWING DIMENSIONS WITH ACTUAL FIELD CONDITIONS AND INSPECT RELATED WORK AND ADJACENT SURFACES. THE CONTRACTOR SHALL VERIFY THE ACCURACY OF ALL FINISH GRADES WITHIN THE WORK AREA. THE CONTRACTOR SHALL REPORT TO THE CITY ENGINEER ALL CONDITIONS WHICH PREVENT PROPER EXECUTION OF THIS WORK.

3. THE EXACT LOCATION OF ALL EXISTING UTILITIES, STRUCTURES AND UNDERGROUND UTILITIES, WHICH MAY NOT BE INDICATED ON THE DRAWINGS, SHALL BE DETERMINED BY THE CONTRACTOR. THE CONTRACTOR SHALL PROTECT EXISTING STRUCTURES AND UTILITY SERVICES AND IS RESPONSIBLE FOR THEIR REPLACEMENT IF DAMAGED.

4. THE CONTRACTOR SHALL KEEP THE PREMISES FREE FROM RUBBISH AND ALL DEBRIS AT ALL TIMES AND SHALL ARRANGE MATERIAL STORAGE SO AS NOT TO INTERFERE WITH THE OPERATION OF THE PROJECT. ALL UNUSED MATERIALS, RUBBISH AND DEBRIS SHALL BE REMOVED FROM THE SITE.

5. NO TREES OR SHRUBS SHALL BE PLANTED ON EXISTING OR PROPOSED UTILITY LINES.

6. QUALITY ASSURANCE:
   A. NOMENCLATURE: PLANT NAMES SHALL CONFORM TO THE LATEST EDITION OF "STANDARDIZED PLANT NAMES" AS ADOPTED BY THE AMERICAN JOINT COMMITTEE ON HORTICULTURAL NOMENCLATURE.

   B. SIZE AND GRADING: PLANT SIZES AND GRADING SHALL CONFORM TO THE LATEST EDITION OF "AMERICAN STANDARD FOR NURSERY STOCK" AS SPONSORED BY THE AMERICAN ASSOCIATION OF NURSERYMEN, INC (AAN), UNLESS OTHERWISE SPECIFIED.

   C. NURSERY SOURCE: OBTAIN FRESHLY DUG, HEALTHY, VIGOROUS PLANTS NURSERY GROWN UNDER CLIMACTIC CONDITIONS SIMILAR TO THOSE IN THE LOCALITY OF THE PROJECT FOR A MINIMUM OF 2 YEARS. PLANTS SHALL HAVE BEEN LINED OUT IN ROWS, ANNUALLY CULTIVATED, SPRAYED, PRUNED AND FERTILIZED IN ACCORDANCE WITH GOOD HORTICULTURAL PRACTICE. ALL PLANTS SHALL HAVE BEEN TRANSPLANTED OR ROOT PRUNED AT LEAST ONCE IN THE PAST 3 YEARS. BALLED AND BURLAPPED PLANTS MUST COME FROM SOIL WHICH WILL HOLD A FIRM ROOT BALL. HEELED IN PLANTS AND PLANTS FROM COLD STORAGE ARE NOT ACCEPTABLE.

   D. SUBSTITUTIONS: DO NOT MAKE SUBSTITUTIONS OF TREES AND/OR SHRUB MATERIALS. IF REQUIRED LANDSCAPE MATERIAL IS NOT OBTAINABLE, SUBMIT PROOF OF NON-AVAILABILITY AND PROPOSAL FOR USE OF EQUIVALENT MATERIAL. WHEN AUTHORIZED, ADJUSTMENTS OF CONTRACT AMOUNT (IF ANY) WILL BE MADE BY CHANGE ORDER.

7. SEEDING & PLANTING SEASONS AND TIMING CONDITIONS:
   A. UNLESS OTHERWISE DIRECTED IN WRITING, SEED LAWNS FROM MARCH 15 TO JUNE 15, AND FROM AUGUST 15 TO OCTOBER 15.

   B. UNLESS OTHERWISE DIRECTED IN WRITING PLANT TREES AND SHRUBS FROM MARCH 15 TO JUNE 1, AND FROM AUGUST 15 TO OCTOBER 30.

   C. AREAS UNDERGOING CLEARING OR GRADING AND ANY AREAS DISTURBED BY CONSTRUCTION ACTIVITIES WHERE LAWNS OR PLANTINGS ARE TO BE ESTABLISHED AND WORK IS COMPLETE, SHALL BE RESTORED WITH PERMANENT VEGETATIVE COVER AS SOON AS SITE AREAS ARE AVAILABLE AND WITHIN 14 DAYS AFTER WORK IS COMPLETE; WORK SHALL BE WITHIN THE SEASONAL LIMITATIONS FOR EACH KIND OF LANDSCAPE WORK REQUIRED. PROVIDE STABILIZATION WITH TEMPORARY VEGETATIVE COVER (TOPSOIL AND TEMPORARY COVER SEED MIX) WITHIN 14 DAYS AFTER WORK IS COMPLETE, FOR SEEDING OUTSIDE PERMITTED SEEDING PERIODS.

8. EXECUTION:
   A. LANDSCAPE WORK SHALL BE UNDERTAKEN AS SOON AS SITE AREAS ARE AVAILABLE.

   B. TOPSOIL SHALL BE SPREAD NO LESS THAN 4" OVER SUB-GRADE MATERIAL. SOIL AMENDMENTS SHALL BE THOROUGHLY MIXED INTO THE TOP 4" OF TOPSOIL, FOLLOWING THE SPECIFICATIONS STATED BELOW.

   C. PERFORM FINE GRADING TO FINISHED ELEVATION ONLY IMMEDIATELY PRIOR TO PLANTING. PLANTING AREAS SHALL BE GRADED TO A SMOOTH, EVEN SURFACE, FREE OF DEPRESSIONS OR RIDGES WITH A UNIFORM LOOSE, FINE TEXTURE.

   D. FERTILIZING:
      i. THE SOIL SHALL BE TESTED FOR PH AND LIME ADDED AS NECESSARY. ALL AMENDMENTS SHALL BE CHECKED AND APPROVED BY LANDSCAPE ARCHITECT BEFORE AMENDMENTS ARE MADE.

      ii. APPLY FERTILIZER AT RATE OF 4 LBS/1000 SF FOR LAWN AREAS.

   E. LAWN:
      i. LAWN SEED MIX: SEED AT THE RATE OF 5 TO 6 LBS PER 1,000 SF.

   F. ALL SEEDED AREAS SHALL BE PROTECTED FROM EROSION BY ONE OF THE FOLLOWING METHODS:
      i. A UNIFORM BLANKET OF STRAW APPLIED AT A RATE OF 2 TONS/ACRE MIN, TO BE APPLIED ONCE SEEDING IS COMPLETE.

      ii. WOOD FIBER CELLULOSE APPLIED WITH SEED MIX BY A HYDROSEEDER AT A RATE OF 2,000 LBS/ACRE.

   G. ALL SEEDED SLOPES 3:1 OR GREATER SHALL BE PROTECTED FROM EROSION WITH JUTE MESH OR APPROVED EQUAL.

   H. ALL NEWLY PLANTED AREAS SHALL BE KEPT MOIST BY WATERING UNTIL GRASSES AND GROUND COVERS ARE WELL ESTABLISHED. THE LANDSCAPE CONTRACTOR MUST WATER PLANT MATERIAL WHEN NECESSARY FOR 60 DAYS AFTER INSTALLATION.

   I. LAWNS ARE TO BE WARRANTED UNTIL THEY BECOME ESTABLISHED, UNTIL FINAL ACCEPTANCE, AND NOT LESS THAN 60 DAYS AFTER COMPLETION OF ALL WORK. TREES, SHRUBS, GROUND COVERS, AND PERENNIALS SHALL BE WARRANTED AGAINST DEFECTS INCLUDING POOR GROWTH AND DEATH, EXCEPT WHEN RESULTING FROM OWNER NEGLECT, INCIDENTS THAT ARE BEYOND THE CONTROL OF THE LANDSCAPE INSTALLER AND DAMAGE OR ABUSE BY OTHERS, FOR AT LEAST ONE FULL YEAR AFTER PROJECT COMPLETION.

CITY OF NEWBURGH
83 BROADWAY
NEWBURGH, NY 12550
TEL: (845) 569-7300

THE ALTERATION OF THIS MATERIAL IN ANY WAY, UNLESS UNDER THE DIRECTION OF A PROFESSIONAL ENGINEER, IS A VIOLATION OF SECTION 7209, SUBDIVISION 2, OF THE NEW YORK STATE LAW AND IS A CLASS "A" MISDEMEANOR.

CONTRACT PHASE:
CONSTRUCTION DOCUMENTS

DATE:
JULY 13, 2016

ADDENDA/REVISIONS

NO.	NAME	DATE

THIS DRAWING REFLECTS ALL CHANGES PREVIOUSLY MADE ON THIS SHEET. VERIFY THAT PREVIOUS CHANGES HAVE BEEN INCORPORATED INTO THE CONTRACT BEFORE PROCEEDING WITH ANY WORK NOT SPECIFICALLY REFERENCED BY THIS REVISION.

PROJECT NUMBER:	
DESIGNED BY:	
DRAWN BY:	
CHECKED BY:	

PROJECT TITLE:
LIBERTY STREET CDBG SIDEWALKS

LOCATION:
LIBERTY STREET
CITY OF NEWBURGH
ORANGE COUNTY, NEW YORK

OWNER:
CITY OF NEWBURGH

SHEET TITLE:
LANDSCAPING NOTES AND DETAILS

DRAWING NUMBER:
C-510

SHEET 12 OF 15

Jul 13,2016 - 5:20pm
E:\2015\2015048.01 Newburgh Liberty St\CADD\Newburgh City Standards\2015048.01 C-510 Landscaping Notes and Details.dwg
36x24 PLOT SHEET

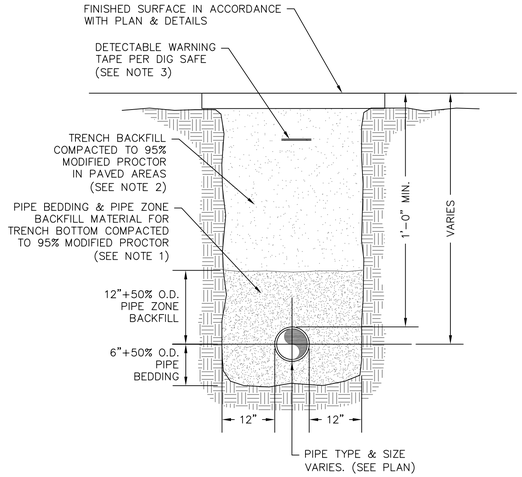

NOTES:

1. PIPE BEDDING & PIPE ZONE BACKFILL SHALL BE A NATURAL RUN-OF-BANK (R.O.B.) SAND OR A MIXTURE OF CRUSHED STONE AND GRAVEL, FREE OF SOFT, NONDURABLE PARTICLES, ORGANIC MATERIALS AND ELONGATED PARTICLES, AND SHALL BE WELL GRADED FROM FINE TO COARSE PARTICLES. BEDDING GRADATIONS SHALL BE APPROVED BY THE CITY ENGINEER AND/OR PLUMBING INSPECTOR AND SHALL MEET THE FOLLOWING GRADATION REQUIREMENTS:

SIEVE DESIGNATION	% PASSING
3/4"	100%
NO. 40	0-70%
NO. 200	0-10%

2. TRENCH BACKFILL SHALL BE A NATURAL RUN-OF-BANK (R.O.B.) OR PROCESSED GRAVEL, OR EXCAVATED MATERIAL FREE OF SOFT, NONDURABLE PARTICLES, ORGANIC MATERIALS AND ELONGATED PARTICLES, AND SHALL BE WELL GRADED FROM FINE TO COARSE PARTICLES. TRENCH BACKFILL GRADATIONS SHALL BE APPROVED BY THE CITY ENGINEER AND/OR PLUMBING INSPECTOR AND SHALL MEET THE FOLLOWING GRADATION REQUIREMENTS:

SIEVE DESIGNATION	% PASSING
4"	100%
NO. 40	0-70%
NO. 200	0-10%

IN UNPAVED AREAS TRENCH BACKFILL CAN BE MATERIALS EXCAVATED FROM THE TRENCH AS APPROVED BY THE ENGINEER.

3. INSTALL CONTINUOUS DETECTABLE MARKING TAPE DURING BACKFILLING OF TRENCH FOR UNDERGROUND PIPING. LOCATE TAPE 12" BELOW FINISHED GRADE, DIRECTLY OVER PIPING, EXCEPT 6" BELOW SUBGRADE UNDER PAVEMENTS & SLAB.

4. TRENCHING SHALL BE IMPLEMENTED IN ACCORDANCE WITH O.S.H.A. STANDARDS.

1 / C-515 PIPE TRENCH DETAIL (TYPICAL)

SCALE: NOT TO SCALE

ACCEPTABLE MANHOLE STEPS

MANUFACTURER	PATTERN NUMBER	"A" STEP WIDTH	"B" LEG LENGTH	"C" RUNG CLEAR	"D" EMBED-MENT	"E" RUNG CLEAR
M.A. INDUSTRIES INC*	PS2-PF	15 7/16	9 3/8	14	3 3/8	6"
M.A. INDUSTRIES INC*	PS2-PFS	15 7/16	8 1/2	14	3 3/8	5 1/8"

* OR EQUIVALENT

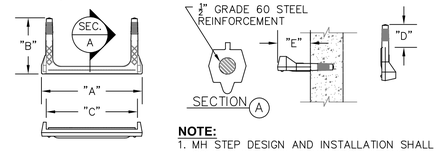

NOTE:

1. MH STEP DESIGN AND INSTALLATION SHALL COMPLY WITH ALL OSHA REGULATIONS.
2. CAST IN PLACE OR PRESS FIT ACCEPTABLE.

2 / C-515 COPOLYMER POLYPROPYLENE MH STEP

SCALE: NOT TO SCALE

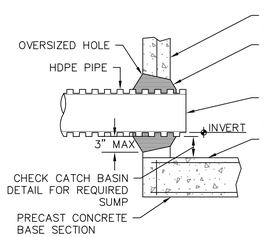

3 / C-515 HDPE PIPE GROUT SEAL JOINT TO DRAINAGE STRUCTURE

SCALE: NOT TO SCALE

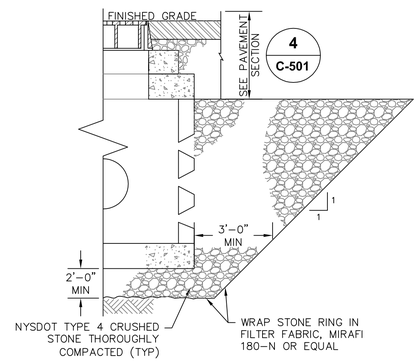

NOTE:

1. SEE PRECAST CONCRETE BASIN DETAIL FOR ADDITIONAL NOTES AND DETAILS

4 / C-515 PRECAST DRYWELL

SCALE: NOT TO SCALE

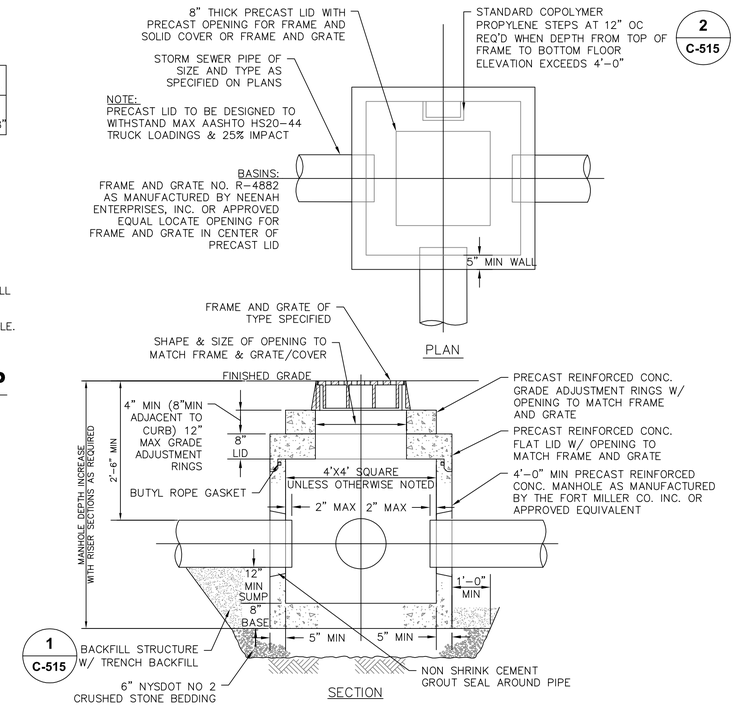

NOTES:

1. CATCH BASIN SHALL BE PRECAST CONCRETE. DESIGNED FOR HS20-44 VEHICULAR LOADING AND 25% IMPACT.
2. FRAME AND COVER SHALL BE DESIGNED FOR H20-44 VEHICULAR LOADING & 25% IMPACT.
3. CONCRETE CATCH BASIN LID CLEAR OPENING DIMENSION MUST MATCH FRAME AND GRATE CLEAR OPENING DIMENSION.
4. CATCH BASINS HAVING A DEPTH GREATER THAN 48" FROM FINISHED SURFACE TO THE FLOOR OF THE CONCRETE BASE SHALL BE PROVIDED WITH STEPS.
5. BACKFILL USING TRENCH BACKFILL, COMPACTED IN 6" LIFTS.
6. SUMPS FOR CATCH BASINS SHALL BE 12".
7. ECCENTRIC CONE TOP CAN BE USED FOR MANHOLES DEPTH GREATER THAT 7 FEET.
8. ALL PRECAST CONSTRUCTION IN ACCORDANCE W/ASTM C478.

5 / C-515 PRECAST CONCRETE BASIN

SCALE: NOT TO SCALE

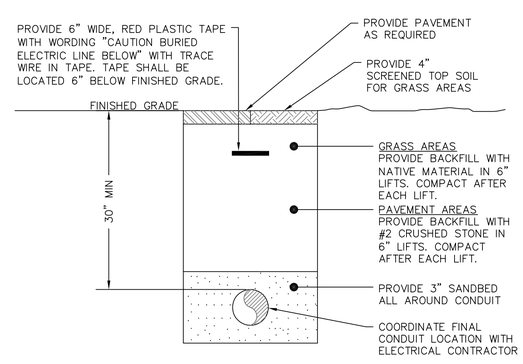

6 / C-515 DIRECT BURIED CONDUIT DETAIL

SCALE: NOT TO SCALE

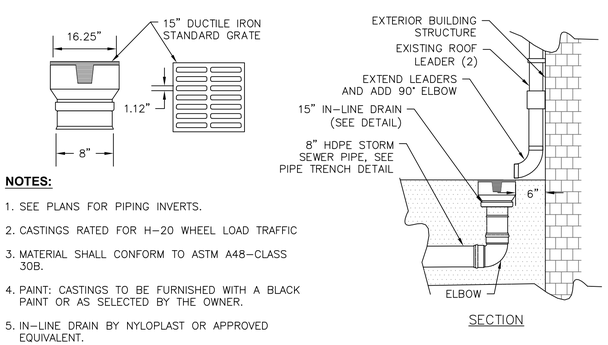

NOTES:

1. SEE PLANS FOR PIPING INVERTS.
2. CASTINGS RATED FOR H-20 WHEEL LOAD TRAFFIC
3. MATERIAL SHALL CONFORM TO ASTM A48-CLASS 30B.
4. PAINT: CASTINGS TO BE FURNISHED WITH A BLACK PAINT OR AS SELECTED BY THE OWNER.
5. IN-LINE DRAIN BY NYLOPLAST OR APPROVED EQUIVALENT.

7 / C-515 ROOF LEADER IN-LINE DRAIN CONNECTION

SCALE: NOT TO SCALE

CITY OF NEWBURGH
83 BROADWAY
NEWBURGH, NY 12550
TEL: (845) 569-7300

THE ALTERATION OF THIS MATERIAL IN ANY WAY, UNLESS UNDER THE DIRECTION OF A PROFESSIONAL ENGINEER, IS A VIOLATION OF SECTION 7209, SUBDIVISION 2, OF THE NEW YORK STATE LAW AND IS A CLASS "A" MISDEMEANOR.

CONTRACT PHASE:

CONSTRUCTION DOCUMENTS

DATE:

JULY 13, 2016

ADDENDA/REVISIONS

NO.	NAME	DATE

THIS DRAWING REFLECTS ALL CHANGES PREVIOUSLY MADE ON THIS SHEET. VERIFY THAT PREVIOUS CHANGES HAVE BEEN INCORPORATED INTO THE CONTRACT BEFORE PROCEEDING WITH ANY WORK NOT SPECIFICALLY REFERENCED BY THIS REVISION.

PROJECT NUMBER:

DESIGNED BY:

DRAWN BY:

CHECKED BY:

PROJECT TITLE:

LIBERTY STREET CDBG SIDEWALKS

LOCATION:

LIBERTY STREET
CITY OF NEWBURGH
ORANGE COUNTY, NEW YORK

OWNER:

CITY OF NEWBURGH

SHEET TITLE:

UTILTIY DETAILS

DRAWING NUMBER:

C-515

SHEET 13 OF 15

Jul 13,2016 - 5:21pm
E:\2015\2015048.01 Newburgh Liberty St\CADD\Newburgh City Standards\2015048.01 C-515 Utility Details.dwg
36x24 PLOT SHEET

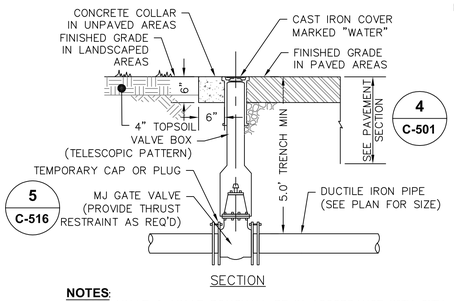

SECTION

NOTES:
1. GATE VALVE & VALVE BOX SHALL BE IN ACCORDANCE WITH CITY OF NEWBURGH STANDARDS.
2. SEE DETAIL 1/C-515 FOR TRENCHING DETAILS.

1 C-516 DUCTIL IRON SERVICE PIPE AND VALVE

SCALE: NOT TO SCALE

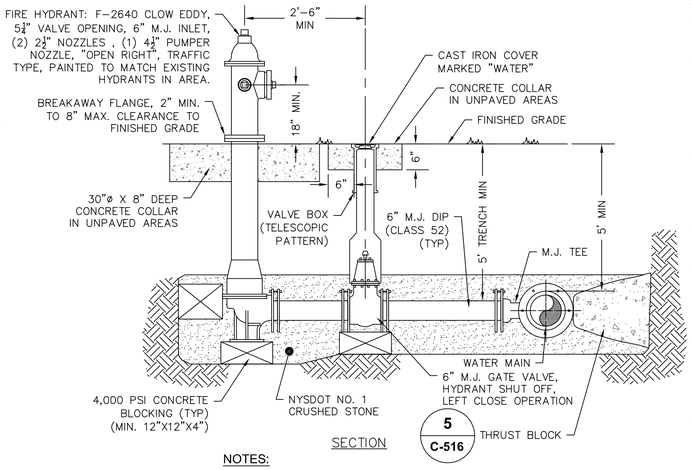

SECTION

NOTES:
1. GATE VALVE & HYDRANT ASSEMBLY SHALL BE IN ACCORDANCE WITH CITY OF NEWBURGH STANDARDS.

2 C-516 WATER HYDRANT DETAIL

SCALE: NOT TO SCALE

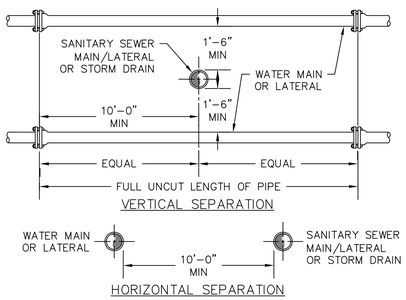

NOTES:
1. NO DEVIATION IN THE SEPARATION REQUIREMENTS WILL BE PERMITTED WITHOUT THE EXPRESS APPROVAL OF THE NYS HEALTH DEPARTMENT. OFFSETTING OF WATERLINE SHALL BE REQUIRED WHERE SEPARATION DISTANCES CANNOT BE MAINTAINED, SEE WATER MAIN OFFSET DETAIL 4/C-516.
2. WHEN IT IS IMPOSSIBLE TO OBTAIN VERTICAL SEPARATION AS INDICATED ABOVE, BOTH THE WATER MAIN AND THE SEWER MAIN SHALL BE CONSTRUCTED OF MECHANICAL JOINT DUCTILE IRON PIPE OR PVC WATER WORKS GRADE PRESSURE PIPE FOR 10' EACH SIDE OF CROSSING AND SHALL BE PRESSURE TESTED TO 150psi TO ASSURE WATER TIGHTNESS.

3 C-516 WATER MAIN AND SANITARY/ STORM SEWER SEPERATION

SCALE: NOT TO SCALE

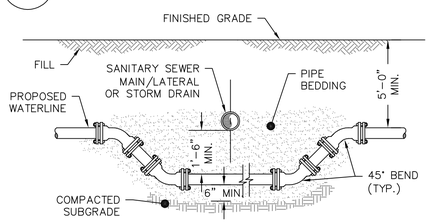

SECTION

NOTES:
1. WHEN THE ELEVATION OF THE SEWER CAN NOT BE VARIED TO MEET THE ABOVE REQUIREMENTS, THE WATER MAIN SHALL BE RELOCATED TO PROVIDE THIS REQUIRED SEPARATION.
2. WHEN IT IS IMPOSSIBLE TO OBTAIN VERTICAL SEPARATION AS INDICATED ABOVE, BOTH THE WATER MAIN AND THE SEWER MAIN SHALL BE CONSTRUCTED OF MECHANICAL JOINT DUCTILE IRON PIPE OR PVC WATER WORKS GRADE PRESSURE PIPE FOR 10' EACH SIDE OF CROSSING AND SHALL BE PRESSURE TESTED TO 150psi TO ASSURE WATER TIGHTNESS.

4 C-516 WATER MAIN OFFSET DETAIL

SCALE: NOT TO SCALE

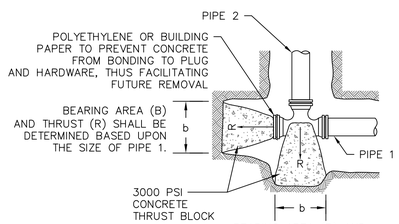

TEE WITH PLUG

REQUIRED BEARING AREAS –B (SQFT) FOR BEARING BLOCKS*					
PIPE SIZE (INCHES)	TEE	90° BEND	45° BEND	22 1/2° BEND	11 1/4° BEND
4	2.0	2.8	1.5	0.8	0.4
6	4.2	5.9	3.2	1.6	0.8
8	7.2	10.1	5.5	2.8	1.4
10	10.9	15.4	8.3	4.2	2.1
12	15.4	21.8	11.8	6.0	3.0
14	20.6	29.1	15.8	8.0	4.0
16	26.8	37.9	20.5	10.4	5.2
18	33.6	47.5	25.7	13.1	6.6
20	41.2	58.2	31.5	16.1	8.1
24	58.8	83.1	45.0	22.9	11.5
30	90.5	128.0	69.2	35.3	17.7
36	129.6	183.3	99.1	50.5	25.4

*FACTOR OF SAFETY=1.5
SOIL BEARING OF 3,000 PSF
225 PSI DESIGN PRESSURE

*BEARING AREA (B) = BX

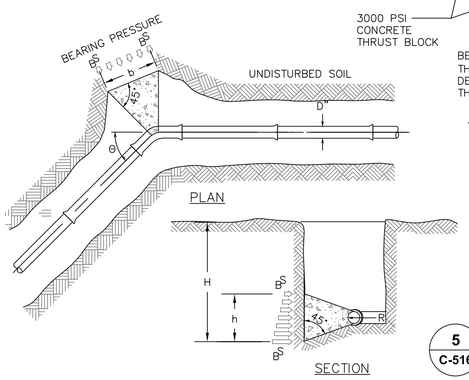

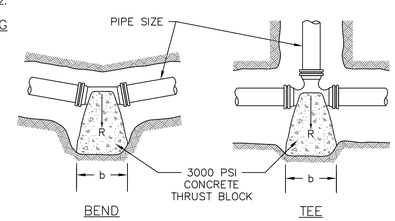

BEND TEE

5 C-516 CONCRETE THRUST BLOCK DETAILS

SCALE: NOT TO SCALE

GENERAL WATER NOTES:

1. USE CONCRETE THRUST BLOCKS OR RESTRAINED JOINT PIPE AND FITTINGS FOR PROPER RESTRAINT OF WATER MAIN PIPE.
2. ALL WATER LINES SHALL BE CEMENT LINED DUCTILE IRON PIPE, CLASS 52, UNLESS OTHERWISE SPECIFIED BY OR APPROVED BY THE ENGINEER.
3. THE WATER LINE MAY BE FLEXED WITHIN PIPE SPECIFICATIONS OR LAID DEEPER IN AREAS WHERE CROSSINGS WITH THE SANITARY LINE OCCUR, TO ACHIEVE THE REQUIRED 1.5' VERTICAL SEPARATION DISTANCE. (SEE WATERLINE OFFSET DETAIL FOR FURTHER INFORMATION).
4. ALL NEW WATER MAIN INSTALLATIONS SHALL BE HYDROSTATICALLY TESTED IN ACCORDANCE WITH AWWA STANDARD C 600(LATEST REVISION) AT A PRESSURE OF 150 PSI, OR 1.5 TIMES (AS REFERENCED ABOVE) THE WORKING PRESSURE OF THE SYSTEM AS A MINIMUM. ALLOWABLE LEAKAGE OF THIS TEST SHALL BE AS DEFINED IN SECTION 4.2 OF SAID AWWA SPECIFICATION.
5. APPROVED AND TESTED WATER MAIN SHALL BE DISINFECTED PER AWWA SECTION C 651 (AS REFERENCED ABOVE), AS DIRECTED BY ENGINEER.
6. THE WATER MAIN IS TO BE INSTALLED AT A CONTINUOUS GRADE WITH NO ABRUPT HIGH OR LOW POINTS.

TESTING WATER MAINS:

1. AFTER TRENCH HAS BEEN BACKFILLED, HYDROSTATIC ACCEPTANCE TESTS, CONSISTING OF A PRESSURE TEST AND A LEAKAGE TEST, SHALL BE PERFORMED ON ALL SECTIONS OF WATER MAINS INSTALLED. LEAKAGE TEST SHALL BE CONDUCTED CONCURRENTLY WITH PRESSURE TEST. TEST SECTION SHALL BE LIMITED TO ABOUT 2000 FT (MAX.) UNLESS OTHERWISE APPROVED BY THE ENGINEER.
2. AFTER ALL TESTS AND INSPECTIONS HAVE BEEN PERFORMED EVIDENCE OF COMPLIANCE SHALL BE FORWARDED TO OWNER/ENGINEER AND THE MUNICIPALITY PRIOR TO ACCEPTANCE.
3. ALL WATER FOR TESTS SHALL BE FURNISHED AND DISPOSED OF BY THE CONTRACTOR AT THE CONTRACTOR'S EXPENSE. SOURCE AND/OR QUALITY OF WATER WHICH THE CONTRACTOR PROPOSES TO USE IN TESTING LINES SHALL BE ACCEPTABLE TO THE ENGINEER.
4. HYDROSTATIC PRESUMPTIVE TESTS MAY BE PERFORMED WHEN SYSTEM IS PARTIALLY BACKFILLED TO SIMPLY CHECK WORK, BUT ACCEPTANCE OF SYSTEM SHALL BE BASED ON HYDROSTATIC TESTS RUN ON FINISHED SYSTEM AFTER IT HAS BEEN COMPLETELY BACKFILLED. ALL HYDROSTATIC TESTS SHALL BE PERFORMED IN ACCORDANCE WITH SECTION 4 OF AWWA STANDARD C 600 OR LATER ADDITION, AS MODIFIED HEREIN.
5. FOR THE PRESSURE TEST, SYSTEM SHALL BE PRESSURIZED AND MAINTAINED AT A MINIMUM OF 150 POUNDS PER SQUARE INCH, OR 1.5 TIMES THE WORKING PRESSURE, WHICHEVER IS GREATER, BASED ON THE ELEVATION OF THE LOWEST POINT IN THE SECTION BEING TESTED AND CORRECTED TO THE ELEVATION OF THE GAUGE. PROVISIONS SHALL BE MADE TO RELIEVE AIR TRAPPED AT HIGH POINTS IN THE SYSTEM THROUGH ADJACENT HYDRANTS OR THROUGH TAPS AND CORPORATION STOPS INSTALLED FOR THIS PURPOSE BY THE CONTRACTOR. AFTER SAID PRESSURE HAS BEEN MAINTAINED SUCCESSFULLY, WITH FURTHER PUMPING AS REQUIRED, FOR A PERIOD OF AT LEAST TWO HOURS, THE SECTION UNDER TEST SHALL BE CONSIDERED TO HAVE PASSED THE PRESSURE TEST.
6. LEAKAGE TEST SHALL BE PERFORMED CONCURRENTLY USING A MINIMUM TEST PRESSURE OF 150 LBS/SQUARE INCH, OR 1.5 TIMES THE WORKING PRESSURE, WHICHEVER IS GREATER, BASED ON THE ELEVATION OF THE LOWEST POINT IN THE SECTION UNDER TEST AND CORRECTED TO ELEVATION OF THE GAUGE. LEAKAGE TEST DURATION SHALL BE A MINIMUM OF 2 HOURS AFTER LEAKAGE RATE HAS STABILIZED.
7. MAXIMUM ALLOWABLE LEAKAGE SHALL BE AS SHOWN IN THE FOLLOWING TABLE: ALLOWABLE LEAKAGE PER 1000 FT (305M) OF PIPELINE (GPH)

AVG. TEST PRESSURE	NOMINAL PIPE DIAMETER–IN.						
PSI	4	6	8	10	12	14	16
450	0.57	0.86	1.15	1.43	1.72	2.01	2.29
400	0.54	0.81	1.08	1.35	1.62	1.89	2.16
350	0.51	0.76	1.01	1.26	1.52	1.77	2.02
300	0.47	0.70	0.94	1.17	1.40	1.64	1.87
275	0.45	0.67	0.90	1.12	1.34	1.57	1.79
250	0.43	0.64	0.85	1.07	1.28	1.50	1.71
225	0.41	0.61	0.81	1.01	1.22	1.42	1.62
200	0.38	0.57	0.76	0.96	1.15	1.34	1.53
175	0.36	0.54	0.72	0.89	1.07	1.25	1.43
150	0.33	0.50	0.66	0.83	0.99	1.16	1.32
125	0.30	0.45	0.60	0.76	0.91	1.06	1.21
100	0.27	0.41	0.54	0.68	0.81	0.95	1.08

8. IF LEAKAGE IN SYSTEM EXCEEDS THE SPECIFIED AMOUNT, THE CONTRACTOR SHALL, AT NO ADDED COST TO THE OWNER, LOCATE, REPAIR, AND/OR REPLACE DEFECT(S) AND RE–TEST PIPING SYSTEM.

THRUST BLOCK NOTES:

1. CONCRETE SHALL NOT TO OVERLAP ANY JOINT.
2. THRUST BLOCKS SHALL BE CONFIGURED IN A MANNER THAT DOES NOT INTERFERE WITH REMOVAL OR INSTALLATION OF ANY JOINTING COMPONENTS.
3. FOR REDUCERS, USE MECHANICAL JOINT FITTINGS WITH RETAINER GLANDS.
4. BEARING SURFACE SHALL, WHERE POSSIBLE, BE PLACED AGAINST UNDISTURBED SOIL. WHERE THAT IS NOT POSSIBLE, THE FILL BETWEEN THE BEARING SURFACE AND UNDISTURBED SOIL MUST BE COMPACTED TO AT LEAST 90% STANDARD PROCTOR DENSITY.
5. BLOCK HEIGHT (h) SHALL BE EQUAL TO OR LESS THAN ONE–HALF THE TOTAL DEPTH TO THE BOTTOM OF THE BLOCK, (HT), BUT NOT LESS THAN THE PIPE DIAMETER (D).
6. BLOCK HEIGHT (h) SHALL BE ESTABLISHED SUCH THAT THE CALCULATED BLOCK WIDTH (b) VARIES BETWEEN ONE AND TWO TIMES THE HEIGHT.
7. VALUES FOR TEES APPLY TO TEES, END PLUGS, CAPS, AND TAPPING SLEEVES.
8. REQUIRED BEARING AREAS ARE DEVELOPED TO RESIST THRUSTS RESULTING FROM 150 PSI WORKING PRESSURE PLUS 50%(75 PSI) SURGE ALLOWANCE RESULTING IN 225 PSI TOTAL INTERNAL PRESSURE. REQUIRED BEARING AREAS ARE BASED UPON AN ALLOWABLE SOIL BEARING CAPACITY OF 3,000 POUNDS PER SQUARE FOOT. IN RESPONSE TO OTHER SOIL CONDITIONS ENCOUNTERED, BEARING AREAS REQUIRED MAY BE MODIFIED BY THE ENGINEER.

SOIL	BEARING STRENGTH Sb (LB/SQ FT)
MUCK	0
SOFT CLAY	1,000
SILT	1,500
SANDY SILT	3,000
SAND	4,000
SANDY CLAY	6,000
HARD CLAY	9,000

9. IN MUCK, PEAT, OR RECENTLY PLACED FILL, ALL THRUSTS SHALL BE RESISTED BY PILES OR TIE RODS TO SOLID FOUNDATIONS, OR BY REMOVAL OF SUCH UNSTABLE MATERIAL AND REPLACEMENT WITH BALLAST OF SUFFICIENT STABILITY TO RESIST THE THRUSTS; ALL AS REQUIRED BY THE ENGINEER.
10. CONCRETE THRUST BLOCK SHALL BE USED ONLY AS ALLOWED BY THE PROJECT PLAN AND/OR SPECIFICATION. (IF RESTRAINED JOINT PIPE IS TO BE USED SEE SCHEDULE OF JOINT RESTRAINED PIPE.)

DISINFECTION OF POTABLE WATER SERVICE MAINS:

1. DISINFECTION WILL BE ACCOMPLISHED AFTER PIPE HAS PASSED ANY LEAKAGE TESTS.
2. THE MUNICIPALITY AND THE ENGINEER SHALL BE NOTIFIED AT LEAST 48 HOURS PRIOR TO THE START OF PRESSURE TESTING, LEAKAGE TESTING, AND DISINFECTION.
3. DISINFECTION WILL BE PERFORMED IN ACCORDANCE WITH AWWA STANDARD C 651–14 OR LATER ADDITION. (EXCLUDING SECTION 5.1 COVERING THE TABLET METHOD).
4. CHLORINE–WATER SOLUTION IS PREPARED BY ADDING SODIUM HYPOCHLORITE TO WATER IN ACCORDANCE WITH THE FOLLOWING TABLE (VERIFY AGAINST MUNICIPLE REQUIREMENTS): CHLORINE REQUIRED TO PRODUCE 25 MG/L CONCENTRATION IN 100 FT. OF PIPE BY DIAMETER

PIPE SIZE IN.	100 PERCENT CHLORINE LB.	1 PERCENT CHLORINE SOLUTIONS GAL.
6	0.030	0.36
8	0.054	0.65
12	0.120	1.44

NOTE: 1% SOLUTIONS REQUIRE 1 POUND OF SODIUM HYPOCHLORITE IN 8 GAL OF WATER

5. PRODUCT DETERIORATION MUST BE CONSIDERED IN COMPUTING THE QUANTITY OF SODIUM HYPOCHLORITE REQUIRED FOR THE DESIRED CONCENTRATION.
6. CHLORINE–WATER SOLUTION SHALL BE INTRODUCED INTO THE WATER MAIN WITH A GASOLINE OR ELECTRICALLY POWERED CHEMICAL FEED PUMP DESIGNED FOR FEEDING CHLORINE SOLUTIONS. FEED LINES SHALL BE OF SUCH MATERIAL AND STRENGTH TO PERMIT THEM TO WITHSTAND SAFELY THE MAXIMUM PRESSURE THAT MAY BE CREATED BY PUMP. ALL CONNECTIONS SHALL BE CHECKED FOR TIGHTNESS BEFORE HYPOCHLORITE SOLUTION IS APPLIED TO MAIN.
7. THE CONTRACTOR SHALL FURNISH AND INSTALL A CORPORATION STOP JUST DOWNSTREAM FROM THE NEWLY INSTALLED GATE VALVE OR AS OTHERWISE SHOWN ON DRAWINGS OR APPROVED BY THE ENGINEER.
8. GENERALLY, THE FOLLOWING PROCEDURE SHALL BE USED TO DISINFECT THE NEW MAIN. THE CONTRACTOR SHALL HOWEVER, REVIEW THEIR PROPOSED PROCEDURES WITH THE ENGINEER AT LEAST 48 HOURS PRIOR TO START OF DISINFECTION. ALL DISINFECTION PROCEDURES MUST BE APPROVED BY THE ENGINEER BEFORE DISINFECTION STARTS.
   A. ALL GATE VALVES AND HYDRANTS MUST BE CLOSED. THE NEW MAIN SHOULD ALREADY BE FULL OF WATER FORM THE HYDROSTATIC TESTS; IF NOT, IT SHALL BE FILLED.
   B. MIX CHLORINE–WATER SOLUTION IN 55 GALLON DRUMS; CONNECT FEED LINE TO PUMP AND NEW MAIN.
   C. OPEN GATE VALVE ON THE HYDRANT LEAD OF END HYDRANT; THEN OPEN HYDRANT FULLY. (NOTE: HYDRANT MUST ALWAYS BE EITHER FULLY OPENED OF FULLY CLOSED. THE HYDRANT FLOW MAY BE CONTROLLED BY THROTTLING THE GATE VALVE ON THE HYDRANT LEAD).
   D. START PUMPING CHLORINE–WATER SOLUTION INTO WATER MAIN; THEN OPEN UPSTREAM GATE VALVE SLOWLY UNTIL FLOW FROM HYDRANT IS PROPORTIONATE TO THE AMOUNT OF CHLORINE–WATER SOLUTION BEING PUMPED (30 PARTS WATER TO 1 PART CHLORINE–WATER SOLUTION). IF A WATER METER IS NOT AVAILABLE, DISCHARGE RATE MAY BE DETERMINED BY USING EITHER A PITOT GAUGE IN THE DISCHARGE OR BY MEASURING THE TIME TO FILL A CONTAINER OF KNOWN VOLUME (SUCH AS A 55 GAL. BARREL). THE PUMPING RATE CAN BE DETERMINED BY MEASURING THE DROP IN LIQUID LEVEL IN A GIVEN LENGTH OF TIME. (NOTE: A STANDARD 55 GALLON STEEL BARREL CONTAINS 19.75 GAL/FT OF DEPTH OR 1.64 GAL/IN OF DEPTH).
   E. AFTER HYDRANT FLOW AND PUMPING RATE HAVE BEEN ADJUSTED, MAINTAIN A CONSTANT FLOW SO THAT CHLORINE CONCENTRATION IN THE MAIN IS MAINTAINED AT A MINIMUM OF 25 PPM.
   F. PERIODICALLY CHECK HYDRANT DISCHARGE FOR CHLORINE CONCENTRATION BY USING A FIELD CHLORINE RESIDUAL TEST KIT. MAINTAIN HYDRANT DISCHARGE AND PUMPING RATE UNTIL THE MINIMUM CHLORINE CONCENTRATION OF 25 PPM HAS BEEN ACHIEVED THROUGHOUT THE ENTIRE MAIN DISINFECTED.
   G. AFTER THE REQUIRED CONCENTRATION HAS BEEN ACHIEVED, ALL VALVES AND HYDRANTS ON THE MAIN LINE BETWEEN THE UPSTREAM GATE VALVE AND THE DISCHARGE HYDRANT SHALL BE OPERATED IN ORDER TO DISINFECT THE INTERNAL APPURTENANCES. DO NOT OPERATE ANY GATE VALVE THAT IS LOCATED ON A CONNECTION TO AN EXISTING WATER MAIN THAT IS IN SERVICE.
9. AFTER THE CONTRACTOR HAS TAKEN A WATER SAMPLE AND VERIFIED THE MINIMUM 25 PPM CHLORINE CONCENTRATION, UNDER WITNESS BY THE ENGINEER, THE CONTRACTOR SHALL RETAIN THE CHLORINATED WATER IN THE MAIN BY THE FOLLOWING METHOD:
   A. FIRST, CLOSE THE UPSTREAM GATE VALVE.
   B. SECOND, CLOSE THE DISCHARGE HYDRANT.
   C. THIRD, SHUT OFF THE PUMP.
10. CHLORINATED WATER SHALL REMAIN IN THE MAIN FOR A MINIMUM OF 24 HOURS.
11. IF THE CHLORINE RESIDUAL IS LESS THAN 10 PPM AT THE END OF THE 24 HOURS, REPEAT SYSTEM TREATMENT.
12. ANY SECTION OF PIPE, VALVES OR FITTINGS, INCLUDING TAPPING SLEEVES AND VALVES WHICH ARE INSTALLED OUTSIDE THE LIMITS OF THE SYSTEM SUBJECTED TO THE CHLORINATION PROCEDURES SPECIFIED ABOVE, SHALL BE SPRAYED OR SWABBED WITH A 1% HYPOCHLORITE SOLUTION PRIOR TO INSTALLATION.
13. AFTER THE CONTRACTOR HAS TAKEN A WATER SAMPLE AND VERIFIED THE MINIMUM 10 PPM CHLORINE RESIDUAL, UNDER WITNESS BY THE ENGINEER, CONTRACTOR SHALL THOROUGHLY FLUSH CHLORINATED WATER FROM THE MAIN BY THE FOLLOWING METHOD:
   A. FIRST, OPEN THE DISCHARGE HYDRANT.
   B. SECOND, OPEN THE UPSTREAM GATE VALVE.
   C. THIRD, OPEN ANY HYDRANTS ON THE MAIN LINE TO REMOVE ALL CHLORINATED WATER FROM THE HYDRANT LEADS.
14. FLUSH THE MAIN WITH POTABLE WATER IN SUCH A MANNER THAT DOES NOT ADVERSELY AFFECT FISH, PLANT, OR ANIMAL LIFE.
15. THE QUANTITY AND LOCATION OF WATER SAMPLES TO BE TAKEN SHALL BE DETERMINED BY THE ENGINEER.
16. WATER SAMPLES SHALL BE TAKEN BY THE CONTRACTOR IN STERILIZED BOTTLES.
17. ANALYZE WATER SAMPLES IN ACCORDANCE WITH STANDARD METHODS FOR EXAMINATION OF WATER AND WASTEWATER, 14TH EDITION, PUBLISHED BY AMERICAN WATER WORKS ASSN., 6666 WEST QUINCY AVE., DENVER, CO 80235.
18. IF A BACTERIOLOGICAL TEST PROVES THE WATER QUALITY TO BE UNACCEPTABLE; REPEAT SYSTEM TREATMENT.
19. IF A BACTERIOLOGICAL TEST PROVES WATER TO BE ACCEPTABLE; REMOVE FEED LINE AND CORPORATION STOP. CORPORATION STOP WILL BE REPLACED WITH A THREADED BRASS PLUG UNLESS OTHERWISE DIRECTED BY ENGINEER.
20. SAMPLES MUST BE BACTERIOLOGICALLY SAFE BEFORE WATER MAIN IS PLACED IN SERVICE.

CITY OF NEWBURGH
83 BROADWAY
NEWBURGH, NY 12550
TEL: (845) 569-7300

THE ALTERATION OF THIS MATERIAL IN ANY WAY, UNLESS UNDER THE DIRECTION OF A PROFESSIONAL ENGINEER, IS A VIOLATION OF SECTION 7209, SUBDIVISION 2, OF THE NEW YORK STATE LAW AND IS A CLASS "A" MISDEMEANOR.

CONTRACT PHASE:
CONSTRUCTION DOCUMENTS

DATE:
JULY 13, 2016

ADDENDA/REVISIONS

NO.	NAME	DATE

THIS DRAWING REFLECTS ALL CHANGES PREVIOUSLY MADE ON THIS SHEET. VERIFY THAT PREVIOUS CHANGES HAVE BEEN INCORPORATED INTO THE CONTRACT BEFORE PROCEEDING WITH ANY WORK NOT SPECIFICALLY REFERENCED BY THIS REVISION.

PROJECT NUMBER:
DESIGNED BY:
DRAWN BY:
CHECKED BY:

PROJECT TITLE:
LIBERTY STREET CDBG SIDEWALKS

LOCATION:
LIBERTY STREET
CITY OF NEWBURGH
ORANGE COUNTY, NEW YORK

OWNER:
CITY OF NEWBURGH

SHEET TITLE:
WATER DETAILS

DRAWING NUMBER:
C-516

SHEET 14 OF 15

Jul 13,2016 – 5:21pm
E:\2015\2015048.01 Newburgh Liberty St\CADD\Newburgh City Standards\2015048.01 C-516 Water Details.dwg
36x24 PLOT SHEET

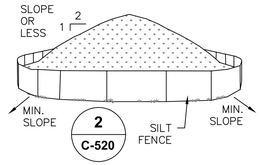

NOTES:

1. AREA CHOSEN FOR STOCKPILING OPERATIONS SHALL BE DRY AND STABLE.
2. MAXIMUM SLOPE OF STOCKPILE SHALL BE 1V:2H.
3. UPON COMPLETION OF SOIL STOCKPILING, EACH PILE SHALL BE SURROUNDED WITH SILT FENCING, THEN STABILIZED WITH VEGETATION OR COVERED.
4. SEE SPECIFICATIONS FOR INSTALLATION OF SILT FENCE.

1 C-520 TEMPORARY SOIL STOCKPILE

SCALE: NOT TO SCALE

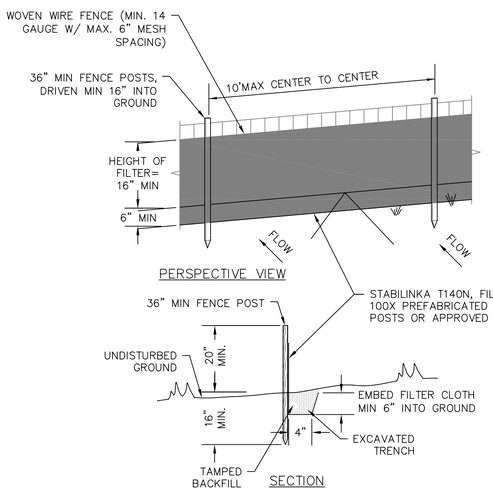

NOTES:

1. WOVEN WIRE FENCE TO BE FASTENED SECURELY TO FENCE POSTS WITH WIRE TIES OR STAPLES. POSTS SHALL BE STEEL "T" OR "U" TYPE OR HARDWOOD.
2. FILTER CLOTH TO BE FASTENED SECURELY TO WOVEN WIRE FENCE WITH TIES SPACED EVERY 24" AT TOP AND MID SECTION. FENCE SHALL BE WOVEN WIRE, 6" MAX MESH OPENING.
3. WHEN TWO SECTIONS OF FILTER CLOTH ADJOIN EACH OTHER THEY SHALL BE OVERLAPPED BY 6" AND FOLDED.
4. MAINTENANCE SHALL BE PERFORMED AS NEEDED AND MATERIALS REMOVED WHEN "BULGES" DEVELOP IN THE SILT FENCE.
5. MAXIMUM DRAINAGE AREA FOR OVERLAND FLOW TO A SILT FENCE SHALL NOT EXCEED 1/4 ACRE PER 100 FEET OF FENCE.
6. SILT FENCE SHALL BE USED WHERE EROSION COULD OCCUR IN THE FORM OF SHEET EROSION.
7. SILT FENCE SHALL NOT BE USED WHEN A CONCENTRATION OF WATER IS FLOWING TO THE BARRIER.
8. MAXIMUM ALLOWABLE SLOPE LENGTHS CONTRIBUTING RUN-OFF TO A SILT FENCE ARE:

SLOPE STEEPNESS	MAXIMUM SLOPE LENGTH(FT)
2:1	25
3:1	50
4:1	75
5:1 OR FLATTER	100

2 C-520 SILT FENCE INSTALLATION

SCALE: NOT TO SCALE

CONSTRUCTION SEQUENCING NOTES:

1. PRIOR TO COMMENCING ANY CLEARING, GRUBBING, EARTHWORK ACTIVITIES, ETC. AT THE SITE, THE CONTRACTOR SHALL FLAG THE WORK LIMITS AND SHALL INSTALL TEMPORARY EROSION AND SEDIMENT CONTROL MEASURES (I.E. SILT FENCES, TREE PROTECTION/BARRIER FENCES, STABILIZED CONSTRUCTION ENTRANCES, STORM DRAIN SEDIMENT FILTERS, DRAINAGE DITCH SEDIMENT FILTERS, ETC.) INDICATED ON THE PROJECT DRAWINGS AND AS REQUIRED. TEMPORARY EROSION AND SEDIMENT CONTROL MEASURES MUST BE CONSTRUCTED, STABILIZED, AND FUNCTIONAL BEFORE SITE DISTURBANCE BEGINS WITHIN THEIR TRIBUTARY AREAS. SILT FENCE SHALL BE INSTALLED AROUND STAGING AREA.
2. THE CONTRACTOR SHALL COMMENCE SITE CONSTRUCTION ACTIVITIES INCLUDING CLEARING & GRADING OF THE PROPOSED AREA OF DISTURBANCE AS REQUIRED.
8. INSTALL PROTECTIVE MEASURES AT THE LOCATIONS OF ALL GRATE INLETS, CURB INLETS, AND AT THE ENDS OF ALL EXPOSED STORM SEWER PIPES.
9. CONSTRUCT ALL UTILITIES, CURB AND GUTTER, GUTTER INLETS, AREA INLETS, AND STORM SEWER MANHOLES, AS SHOWN ON THE PLANS. INLET PROTECTION MAY BE REMOVED TEMPORARILY FOR THIS CONSTRUCTION.
10. FINALIZE PAVEMENT SUB-GRADE PREPARATION.
11. REMOVE PROTECTIVE MEASURES AROUND INLETS AND MANHOLES NO MORE THAN 24 HOURS PRIOR TO PLACING STABILIZED BASE COURSE.
12. INSTALL SUB-BASE MATERIAL AS REQUIRED FOR PAVEMENT.
13. PRIOR TO FINALIZING CONSTRUCTION, ALL CATCH BASINS AND DRAINAGE LINES SHALL BE CLEANED OF ALL SILT AND SEDIMENT.
15. THE CONTRACTOR SHALL REMOVE ALL TEMPORARY EROSION AND SEDIMENT CONTROL MEASURES AND IMMEDIATELY ESTABLISH PERMANENT VEGETATION ON THE AREAS DISTURBED DURING THEIR REMOVAL AND STAGING AREA.

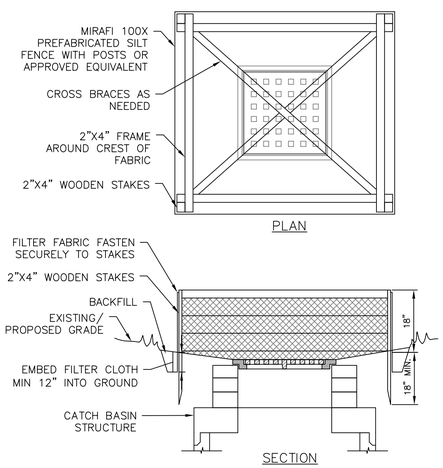

NOTES:

1. FILTER FABRIC SHALL HAVE AN EOS OF 40-85.
2. CUT FABRIC FROM CONTINUOUS ROLL TO ELIMINATE JOINTS. IF JOINTS ARE NEEDED, OVERLAP TO THE NEXT STAKE.
3. STAKE MATERIALS WILL BE STANDARD 2"x4" WOOD OR EQUIVALENT, WITH A MINIMUM LENGTH OF 3 FEET.
4. SPACE STAKES EVENLY AROUND INLET 3 FEET APART AND DRIVE MINIMUM 18" DEEP. SPANS GREATER THAN 3 FEET MAY BE BRIDGED WITH THE USE OF WIRE MESH BEHIND FABRIC FOR SUPPORT.
5. FABRIC SHALL BE EMBEDDED 1 FOOT MINIMUM BELOW GROUND AND BACKFILLED. IT SHALL BE SECURELY FASTENED TO THE STAKES AND FRAME.
6. A 2"x4" WOOD FRAME SHALL BE COMPLETED AROUND THE CREST OF THE FABRIC FOR OVERFLOW STABILITY.
7. MAXIMUM DRAINAGE AREA IS 1 ACRE.
8. INLET PROTECTION SHALL REMAIN IN-PLACE UNTIL SITE HAS BEEN STABILIZED.

3 C-520 TEMPORARY OUT OF PAVEMENT FILTER FABRIC DROP INLET PROTECTION

SCALE: NOT TO SCALE

GENERAL EROSION AND SEDIMENT CONTROL NOTES:

1. ALL EROSION AND SEDIMENT CONTROL MEASURES ARE TO BE IN STRICT COMPLIANCE WITH "NEW YORK STATE STANDARDS AND SPECIFICATIONS FOR EROSION AND SEDIMENT CONTROL", AUGUST 2005.
2. EXCESS SOIL TO BE STOCKPILED WITHIN THE LIMITS OF SITE DISTURBANCE IF NOT USED IMMEDIATELY FOR GRADING PURPOSES. INSTALL SILT FENCE AROUND SOIL STOCKPILES.
3. APPLY SURFACE STABILIZATION AND RESTORATION MEASURES. AREAS UNDERGOING CLEARING OR GRADING AND ANY AREAS DISTURBED BY CONSTRUCTION ACTIVITIES WHERE WORK IS DELAYED, SUSPENDED, OR INCOMPLETE AND WILL NOT BE REDISTURBED FOR 21 DAYS OR MORE SHALL BE STABILIZED WITH TEMPORARY VEGETATIVE COVER WITHIN 14 DAYS AFTER CONSTRUCTION ACTIVITY IN THAT PORTION OF THE SITE HAS CEASED. (SEE SPECIFICATIONS FOR TEMPORARY VEGETATIVE COVER). AREAS UNDERGOING CLEARING OR GRADING AND ANY AREAS DISTURBED BY CONSTRUCTION ACTIVITIES WHERE WORK IS COMPLETE AND WILL NOT BE REDISTURBED SHALL BE STABILIZED AND RESTORED WITH PERMANENT VEGETATIVE COVER AS SOON AS SITE AREAS ARE AVAILABLE AND WITHIN 14 DAYS AFTER WORK IS COMPLETE. (SEE SPECIFICATIONS FOR PERMANENT VEGETATIVE COVER). SEEDING FOR PERMANENT VEGETATIVE COVER SHALL BE WITHIN THE SEASONAL LIMITATIONS. PROVIDE STABILIZATION WITH TEMPORARY VEGETATIVE COVER WITHIN 14 DAYS AFTER WORK IS COMPLETE, FOR SEEDING OUTSIDE PERMITTED SEEDING PERIODS.
4. SEEDED AREAS TO BE MULCHED WITH STRAW OR HAY MULCH IN ACCORDANCE WITH VEGETATIVE COVER SPECIFICATIONS.
5. THE CONTRACTOR IS RESPONSIBLE FOR THE INSTALLATION AND MAINTENANCE OF ALL EROSION AND SEDIMENT CONTROL MEASURES THROUGHOUT THE COURSE OF CONSTRUCTION.
6. THE CONTRACTOR IS RESPONSIBLE FOR CONTROLLING DUST BY SPRINKLING EXPOSED SOIL AREAS PERIODICALLY WITH WATER AS REQUIRED. THE CONTRACTOR IS TO SUPPLY ALL EQUIPMENT AND WATER.
7. WHEN ALL DISTURBED AREAS ARE STABLE, ALL TEMPORARY EROSION AND SEDIMENT CONTROL MEASURES SHALL BE REMOVED.

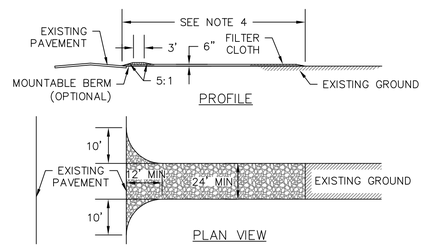

CONSTRUCTION ENTRANCE SPECIFICATIONS:

1. STONE SIZE - USE 2" STONE, OR RECLAIMED OR RECYCLED CONCRETE EQUIVALENT.
2. THICKNESS - NOT LESS THAN SIX (6) INCHES.
3. WIDTH - TWELVE (12) FOOT MINIMUM, BUT NOT LESS THAN THE FULL WIDTH AT POINTS WHERE INGRESS OR EGRESS OCCURS. TWENTY FOUR FEET (24) FOOT IF SINGLE ENTRANCE TO SITE.
4. LENGTH - NOT LESS THAN 50' (EXCEPT ON A SINGLE RESIDENCE LOT WHERE A 30' MINIMUM LENGTH WOULD APPLY).
5. FILTER CLOTH - WILL BE PLACED OVER THE ENTIRE AREA PRIOR TO PLACING OF STONE.
6. SURFACE WATER - ALL SURFACE WATER FLOWING OR DIVERTED TOWARD CONSTRUCTION ENTRANCES SHALL BE PIPED ACROSS THE ENTRANCE. IF PIPING IS IMPRACTICAL, A MOUNTABLE BERM WITH 5:1 SLOPES WILL BE PERMITTED.
7. MAINTENANCE - THE ENTRANCE SHALL BE MAINTAINED IN A CONDITION WHICH WILL PREVENT TRACKING OR FLOWING OF SEDIMENT ONTO PUBLIC RIGHTS-OF-WAY. THIS MAY REQUIRE PERIODIC TOP DRESSING WITH ADDITIONAL STONE AS CONDITIONS DEMAND AND REPAIR AND/OR CLEANOUT OF ANY MEASURES USED TO TRAP SEDIMENT. ALL SEDIMENT SPILLED, DROPPED, WASHED OR TRACKED ONTO PUBLIC RIGHTS-OF-WAY MUST BE REMOVED IMMEDIATELY.
8. WASHING - WHEELS SHALL BE CLEANED TO REMOVE SEDIMENT PRIOR TO ENTRANCE ONTO PUBLIC RIGHTS-OF-WAY. WHEN WASHING IS REQUIRED, IT SHALL BE DONE ON AN AREA STABILIZED WITH STONE AND WHICH DRAINS INTO AN APPROVED SEDIMENT TRAPPING DEVICE.
9. PERIODIC INSPECTION AND NEEDED MAINTENANCE SHALL BE PROVIDED AFTER EACH RAIN.

4 C-520 STABILIZED CONSTRUCTION ENTRANCE

SCALE: NOT TO SCALE

EROSION AND SEDIMENT CONTROL MEASURES:

GENERAL MEASURES:

1. DAMAGE TO SURFACE WATERS RESULTING FROM EROSION AND SEDIMENTATION SHALL BE MINIMIZED BY STABILIZING DISTURBED AREAS AND BY REMOVING SEDIMENT FROM CONSTRUCTION SITE DISCHARGES.
2. AS MUCH AS IS PRACTICAL, EXISTING VEGETATION SHALL BE PRESERVED. FOLLOWING THE COMPLETION OF CONSTRUCTION ACTIVITIES IN ANY PORTION OF THE SITE, PERMANENT VEGETATION SHALL BE ESTABLISHED ON ALL EXPOSED SOILS.
3. SITE PREPARATION ACTIVITIES SHALL BE PLANNED TO MINIMIZE THE SCOPE AND DURATION OF SOIL DISRUPTION.
4. PERMANENT TRAFFIC CORRIDORS SHALL BE ESTABLISHED AND "ROUTES OF CONVENIENCE" SHALL BE AVOIDED. STABILIZED CONSTRUCTION ENTRANCES SHALL BE INSTALLED AT ALL POINTS OF ENTRY ONTO THE PROJECT SITE.

PARTICULAR MEASURES:

1. SOIL STOCKPILES: SILT FENCES SHALL BE CONSTRUCTED AROUND ALL STOCKPILES OF FILL, TOPSOIL, AND EXCAVATED OVERBURDEN THAT ARE TO REMAIN EXPOSED FOR PERIODS LESS THAN 21 DAYS. SILT FENCES SHALL BE ANCHORED AND MAINTAINED IN GOOD CONDITION UNTIL SUCH TIME AS SAID STOCKPILES ARE REMOVED AND STOCKPILING AREAS ARE BROUGHT TO FINAL GRADE AND PERMANENTLY STABILIZED. TOPSOIL AND FILL THAT IS TO REMAIN STOCKPILED ON-SITE FOR PERIODS GREATER THAN 21 DAYS SHALL BE STABILIZED BY SEEDING. PRIOR TO THE SEEDING OPERATION, THE STOCKPILED MATERIAL SHALL BE GRADED AS NEEDED AND FEASIBLE TO PERMIT THE USE OF CONVENTIONAL EQUIPMENT FOR SEEDBED PREPARATION, SEEDING, MULCH APPLICATION, AND MULCH ANCHORING. IN NO CASE SHALL ERODIBLE MATERIALS BE STOCKPILED WITHIN 25 FEET OF ANY DITCH, STREAM, OR OTHER SURFACE WATER BODY.

MAINTENANCE OF EROSION AND SEDIMENT CONTROL MEASURES:

PERMANENT AND TEMPORARY VEGETATION:

INSPECT ALL AREAS THAT HAVE RECEIVED VEGETATION EVERY SEVEN DAYS. ALL AREAS DAMAGED BY EROSION OR WHERE SEED HAS NOT ESTABLISHED SHALL BE REPAIRED AND RESTABILIZED IMMEDIATELY.

SILT FENCE:

INSPECT FOR DAMAGE EVERY SEVEN DAYS. MAKE ALL REPAIRS IMMEDIATELY. REMOVE SEDIMENT FROM THE UP-SLOPE FACE OF THE FENCE BEFORE IT ACCUMULATES TO A HEIGHT EQUAL TO 1/3 THE HEIGHT OF THE FENCE. IF FENCE FABRIC TEARS, BEGINS TO DECOMPOSE, OR IN ANY WAY BECOMES INEFFECTIVE, REPLACE THE AFFECTED SECTION OF FENCE IMMEDIATELY.

SOIL STOCKPILE:

INSPECT SEDIMENT CONTROL BARRIERS (SILT FENCE OR HAYBALE) AND VEGETATION FOR DAMAGE EVERY SEVEN DAYS. MAKE ALL REPAIRS IMMEDIATELY. REMOVE SEDIMENT FROM THE UP-SLOPE FACE OF THE SEDIMENT CONTROL BARRIER BEFORE IT ACCUMULATES TO A HEIGHT EQUAL TO 1/3 THE HEIGHT OF THE SEDIMENT CONTROL BARRIER. IF SEDIMENT CONTROL BARRIER TEARS, BEGINS TO DECOMPOSE, OR IN ANYWAY BECOMES INEFFECTIVE, REPLACE THE AFFECTED SECTION OF SEDIMENT CONTROL BARRIER IMMEDIATELY. REVEGETATE DISTURBED AREA TO STABILIZE SOIL STOCK PILE. REMOVE THE SEDIMENT CONTROL BARRIER WHEN THE SOIL STOCKPILE HAS BEEN REMOVED.

DUST CONTROL:

SCHEDULE CONSTRUCTION OPERATIONS TO MINIMIZE THE AMOUNT OF DISTURBED AREAS AT ANY ONE TIME DURING THE COURSE OF WORK. APPLY TEMPORARY SOIL STABILIZATION PRACTICES SUCH AS MULCHING, SEEDING, AND SPRAYING (WATER). STRUCTURAL MEASURES (MULCH, SEEDING) SHALL BE INSTALLED IN DISTURBED AREAS BEFORE SIGNIFICANT BLOWING PROBLEMS DEVELOP. WATER SHALL BE SPRAYED AS NEEDED. REPEAT AS NEEDED, BUT AVOID EXCESSIVE SPRAYING, WHICH COULD CREATE RUNOFF AND EROSION PROBLEMS.

DEWATERING PITS:

(IF REQUIRED) - INSPECT DAILY DURING OPERATION FOR CLOGGING OR OVERFLOW. CLEAR INLET AND DISCHARGE PIPES OF OBSTRUCTIONS. IF A FILTER MATERIAL BECOMES CLOGGED WITH SEDIMENT, PIT SHALL BE DISMANTLED AND CONSTRUCT NEW PITS AS NEEDED.

SNOW AND ICE CONTROL:

PARKING LOTS, ROADWAYS, AND DRIVEWAYS ADJACENT TO WATER QUALITY FILTERS SHALL NOT BE SANDED DURING SNOW EVENTS DUE TO HIGH POTENTIAL FOR CLOGGING FROM SAND IN SURFACE WATER RUNOFF. USE SALT ONLY FOR SNOW AND ICE CONTROL.

EROSION & SEDIMENT INSPECTION & MAINTENANCE SCHEDULE

STRUCTURE	DAILY	WEEKLY	AFTER RAINFALL	NECESSARY TO MAINTAIN FUNCTION	AFTER COMPLETION OF CONSTRUCTION
SILT FENCE BARRIER	--	INSPECT	INSPECT	CLEAN/ REPLACE	REMOVE
DUST CONTROL	INSPECT	--	INSPECT	MULCHING/ SPRAYING WATER	N/A
VEGETATIVE ESTABLISHMENT	--	INSPECT	INSPECT	WATERING/ RE-SEEDING/ RE-MULCHING	PERMANENT
INLET PROTECTION	--	INSPECT	INSPECT	CLEAN/ REPAIR/ REPLACE	REMOVE

CITY OF NEWBURGH
83 BROADWAY
NEWBURGH, NY 12550
TEL: (845) 569-7300

THE ALTERATION OF THIS MATERIAL IN ANY WAY, UNLESS UNDER THE DIRECTION OF A PROFESSIONAL ENGINEER, IS A VIOLATION OF SECTION 7209, SUBDIVISION 2, OF THE NEW YORK STATE LAW AND IS A CLASS "A" MISDEMEANOR.

CONTRACT PHASE:

CONSTRUCTION DOCUMENTS

DATE:

JULY 13, 2016

ADDENDA/REVISIONS

NO.	NAME	DATE

THIS DRAWING REFLECTS ALL CHANGES PREVIOUSLY MADE ON THIS SHEET. VERIFY THAT PREVIOUS CHANGES HAVE BEEN INCORPORATED INTO THE CONTRACT BEFORE PROCEEDING WITH ANY WORK NOT SPECIFICALLY REFERENCED BY THIS REVISION.

PROJECT NUMBER:

DESIGNED BY:

DRAWN BY:

CHECKED BY:

PROJECT TITLE:

LIBERTY STREET CDBG SIDEWALKS

LOCATION:

LIBERTY STREET
CITY OF NEWBURGH
ORANGE COUNTY, NEW YORK

OWNER:

CITY OF NEWBURGH

SHEET TITLE:

E&SC NOTES AND DETAILS

DRAWING NUMBER:

C-520

SHEET 15 OF 15

Jul 13,2016 - 5:22pm
E:\2015\2015048.01 Newburgh Liberty St\CADD\Newburgh City Standards\2015048.01 C-520 E&SC Notes and Details.dwg
36x24 PLOT SHEET